POS.	TITLE BENENNUNG	PART-NO.:	PART-REV	DATE DATUM	AMOUNT ANZAHL	MATERIAL	COLOR FARBE	NOTES BEMERKUNG
A	CONNECTOR 96 WAY CONNECTOR 96 POL.	SEE CHART	SEE CHART	SEE CHART	---	---	---	CONDITION OF DELIVERY POS. 1-3 ASSEMBLED LIEFERZUSTAND POS. 1-3 MONTIERT
1	RECEPTACLE HOUSING 96 WAY FLACHSTECKHUELSENGEAHAEUSE 96 POL.	SEE CHART	---	---	1	MIXED	---	ONLY ASSY PARTS AVAILABLE NUR MONTIERT LIEFERBAR
2	COVER PLATE ABDECKPLATTE	15494592	---	---	1	PA6 GB20 GF10	BLACK SIMILAR RAL 9011	ONLY ASSY PARTS AVAILABLE NUR MONTIERT LIEFERBAR
3	BLOCKSEAL BLOCKDICHTUNG	13839405	---	---	1	SILICONE 30 SHORE 6% OIL	RED-BROWN SIMILAR RAL 3011	ONLY ASSY PARTS AVAILABLE NUR MONTIERT LIEFERBAR
C	CONNECTOR 96 WAY CONNECTOR 96 POL.	SEE CHART	SEE CHART	SEE CHART	---	---	---	CONDITION OF DELIVERY POS. 4;2;3 ASSEMBLED LIEFERZUSTAND POS. 4;2;3 MONTIERT
4	RECEPTACLE HOUSING 96 WAY FLACHSTECKHUELSENGEAHAEUSE 96 POL.	SEE CHART	---	---	1	MIXED	---	ONLY ASSY PARTS AVAILABLE NUR MONTIERT LIEFERBAR
2	COVER PLATE ABDECKPLATTE	15494592	---	---	1	PA6 GB20 GF10	BLACK SIMILAR RAL 9011	ONLY ASSY PARTS AVAILABLE NUR MONTIERT LIEFERBAR
3	BLOCKSEAL BLOCKDICHTUNG	13839405	---	---	1	SILICONE 30 SHORE 6% OIL	RED-BROWN SIMILAR RAL 3011	ONLY ASSY PARTS AVAILABLE NUR MONTIERT LIEFERBAR
E	CONNECTOR 96 WAY CONNECTOR 96 POL.	SEE CHART	SEE CHART	SEE CHART	---	---	---	CONDITION OF DELIVERY POS. 5;2;3 ASSEMBLED LIEFERZUSTAND POS. 5;2;3 MONTIERT
5	RECEPTACLE HOUSING 96 WAY FLACHSTECKHUELSENGEAHAEUSE 96 POL.	SEE CHART	---	---	1	MIXED	---	ONLY ASSY PARTS AVAILABLE NUR MONTIERT LIEFERBAR
2	COVER PLATE ABDECKPLATTE	15494592	---	---	1	PA6 GB20 GF10	BLACK SIMILAR RAL 9011	ONLY ASSY PARTS AVAILABLE NUR MONTIERT LIEFERBAR
3	BLOCKSEAL BLOCKDICHTUNG	13839405	---	---	1	SILICONE 30 SHORE 6% OIL	RED-BROWN SIMILAR RAL 3011	ONLY ASSY PARTS AVAILABLE NUR MONTIERT LIEFERBAR
G	CONNECTOR 96 WAY CONNECTOR 96 POL.	SEE CHART	SEE CHART	SEE CHART	---	---	---	CONDITION OF DELIVERY POS. 6;2;3 ASSEMBLED LIEFERZUSTAND POS. 6;2;3 MONTIERT
6	RECEPTACLE HOUSING 96 WAY FLACHSTECKHUELSENGEAHAEUSE 96 POL.	SEE CHART	---	---	1	MIXED	---	ONLY ASSY PARTS AVAILABLE NUR MONTIERT LIEFERBAR
2	COVER PLATE ABDECKPLATTE	15494592	---	---	1	PA6 GB20 GF10	BLACK SIMILAR RAL 9011	ONLY ASSY PARTS AVAILABLE NUR MONTIERT LIEFERBAR
3	BLOCKSEAL BLOCKDICHTUNG	13839405	---	---	1	SILICONE 30 SHORE 6% OIL	RED-BROWN SIMILAR RAL 3011	ONLY ASSY PARTS AVAILABLE NUR MONTIERT LIEFERBAR

POS. 2

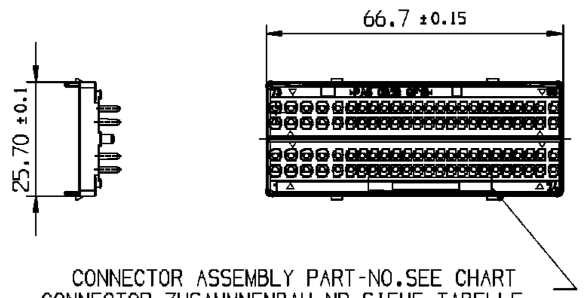

CONNECTOR ASSEMBLY PART-NO.SEE CHART
CONNECTOR ZUSAMMNENBAU NR.SIEHE TABELLE

POS. 3

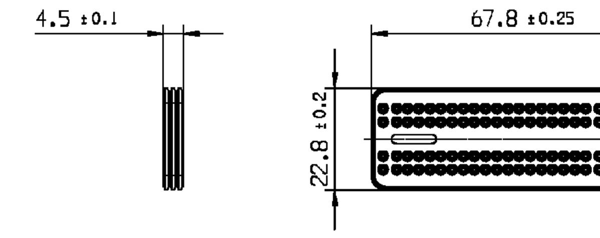

DWG STATUS DATE	STG	REV	N/P	CHG	ZONE	REVISION HISTORY	AUTH	DR	APVD 1	APVD 2
06AU10	R	01				INITIAL RELEASE / FREIGABE		K.BOR	K.STO	SYS.
10JA12	R	01	AA		H14	CAVITIES 1 - 16 ADDED / HINZU		R.DUR	K.STO	SYS.
29FE12	R	02		--	H3	PART-NO.: 13944904, 13944905, 13944906 ADDED / HINZU		V.KAS	K.STO	SYS.
26MR12	R	03		--	F3	PART-NO.: 13953457,13953459,13953460,13953462, 13953463,13953464,13953465 ADDED / HINZU		V.KAS	K.STO	SYS.
14JN12	R	03	AA		F3	PART-NO.13953463 CAVITY 20 OPEN;WRITING ERROR PART-NO.13953463 KAMMER 20 OFFEN;SCHREIBFEHLER		V.KAS	K.STO	SYS.
02JL12	R	04		--		PART-NO.13964569,13964571,13964572,13964573 ADDED / HINZU		V.KAS	K.STO	SYS.
24SE12	R	05		--		PART-NO.: 13983718,13983899,13983900 ADDED/HINZU		V.KAS	K.STO	SYS.
26OC12	R	06		--	D3	PART-NO.: 15504308 ADDED / HINZU		V.KAS	K.STO	SYS.
11MR13	R	07		--	D3-C3	PART-NO.: 15531656-15531664 ADDED / HINZU		V.KAS	K.STO	SYS.
10AP13	R	08		--	C3	PART-NO. 15538209 ADDED / HINZU		V.KAS	K.STO	SYS
17FE14	R	08	AA			CORRECTED EXPOSITION OF THE VIEWS DARSTELLUNG DER ANSICHTEN KORRIGIERT		V.KAS	K.STO	SYS
11OC16	R	09		--	C3	PART-NO. 35013577 ADDED/HINZU		R.MOL	V.KAS	SYS
13AU18	R	10		--	C3	PART-NO. 35212376 AND 35249453 ADDED/HINZU		K.ANJ	S.ANU	S.ANU

POS. 1

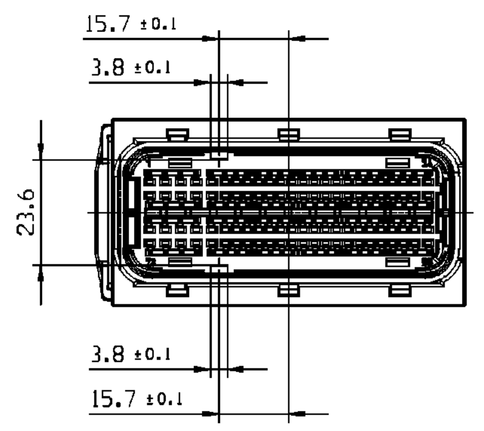

CODING A

POS. 4

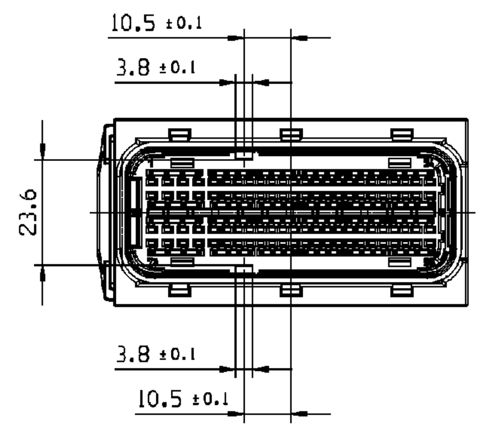

CODING C

POS. 5

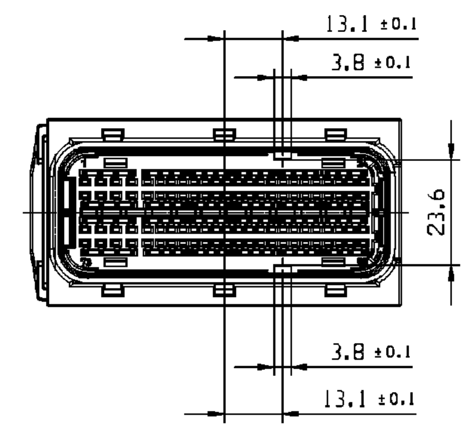

CODING E

POS. 6

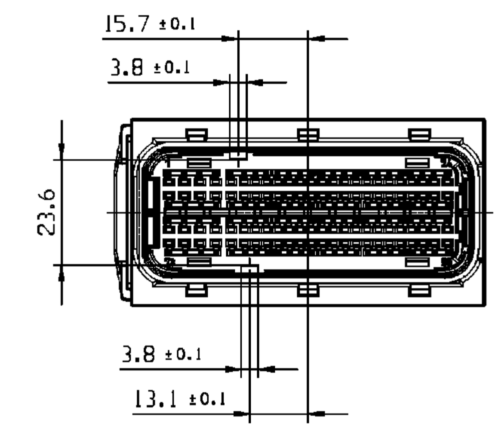

CODING G

(1)

WITH "X" MARKED CAVITIES INDICATE OPEN LOCATIONS FOR TERMINALS SYSTEM 1.2
MARKIERTE FELDER MIT "X" KENNZEICHNEN OFFENE KAMMERN FUER KONTAKTE SYSTEM 1.2

POS.	CONNECTOR 96WAY CONNECTOR 96POL	PART-REV.	DATE DATUM	HOUSING 96 W GEHAEUSE 96 P	1	2	3	4	5	6	7	8	9	10	11	12	13	14	15	16	17	18	19	20	21	22	23	24	25	26	27	28	29	30	31	32	33	34	35	36	37	38	39	40	41	42	43	44	45	46	47	48
A	13839471	01	06AU10	13839467	X	X	X	X	X	X	X	X	X	X	X	X	X	X	X	X	X	X	X	X	X	X	X	X	X	X	X	X	X	X	X	X	X	X	X	X	X	X	X	X	X	X	X	X
C	13839472	01	06AU10	13839468	X	X	X	X	X	X	X	X	X	X	X	X	X	X	X	X	X	X	X	X	X	X	X	X	X	X	X	X	X	X	X	X	X	X	X	X	X	X	X	X	X	X	X	X
E	13839473	01	06AU10	13839470	X	X	X	X	X	X	X	X	X	X	X	X	X	X	X	X	X	X	X	X	X	X	X	X	X	X	X	X	X	X	X	X	X	X	X	X	X	X	X	X	X	X	X	X
G	13839474	01	06AU10	13839469	X	X	X	X	X	X	X	X	X	X	X	X	X	X	X	X	X	X	X	X	X	X	X	X	X	X	X	X	X	X	X	X	X	X	X	X	X	X	X	X	X	X	X	X
A	13944904	01	29FE12	13839467	X	X	X	X						X	X		X			X	X	X	X			X	X	X	X	X	X	X			X			X		X					X	X		X	X	X	X	X
C	13944905	01	29FE12	13839468	X	X	X	X					X	X	X			X		X	X	X				X	X	X	X	X	X	X			X	X	X	X	X	X						X		X	X	X	X	X
C	13944906	01	29FE12	13839468	X	X	X	X		X			X	X	X			X		X	X	X				X	X	X	X	X	X	X			X	X	X	X	X	X						X		X	X	X	X	X
A	13953457	01	26MR12	13953451	X	X	X	X	X	X	X	X	X	X	X	X	X	X	X	X	X	X	X	X	X	X	X	X	X	X	X	X	X	X	X	X	X	X	X	X	X	X	X	X	X	X	X	X
C	13953459	01	26MR12	13953454	X	X	X	X	X	X	X	X	X	X	X	X	X	X	X	X	X	X	X	X	X	X	X	X	X	X	X	X	X	X	X	X	X	X	X	X	X	X	X	X	X	X	X	X
E	13953460	01	26MR12	13953455	X	X	X	X	X	X	X	X	X	X	X	X	X	X	X	X	X	X	X	X	X	X	X	X	X	X	X	X	X	X	X	X	X	X	X	X	X	X	X	X	X	X	X	X
G	13953462	01	26MR12	13953456	X	X	X	X	X	X	X	X	X	X	X	X	X	X	X	X	X	X	X	X	X	X	X	X	X	X	X	X	X	X	X	X	X	X	X	X	X	X	X	X	X	X	X	X
A	13953463	01	26MR12	13953451	X	X	X	X						X	X		X			X	X	X	X	X		X	X	X	X	X	X	X			X			X		X					X	X		X	X	X	X	X
C	13953464	01	26MR12	13953454	X	X	X	X					X	X	X			X		X	X	X				X	X	X	X	X	X	X			X	X	X	X	X	X						X		X	X	X	X	X
C	13953465	01	26MR12	13953454	X	X	X	X		X			X	X	X			X		X	X	X				X	X	X	X	X	X	X			X	X	X	X	X	X						X		X	X	X	X	X
A	13964569	01	26JN12	13964574	X	X	X	X	X	X	X	X	X	X	X	X	X	X	X	X	X	X	X	X	X	X	X	X	X	X	X	X	X	X	X	X	X	X	X	X	X	X	X	X	X	X	X	X
C	13964571	01	26JN12	13964576	X	X	X	X	X	X	X	X	X	X	X	X	X	X	X	X	X	X	X	X	X	X	X	X	X	X	X	X	X	X	X	X	X	X	X	X	X	X	X	X	X	X	X	X
E	13964572	01	26JN12	13964577	X	X	X	X	X	X	X	X	X	X	X	X	X	X	X	X	X	X	X	X	X	X	X	X	X	X	X	X	X	X	X	X	X	X	X	X	X	X	X	X	X	X	X	X
G	13964573	01	26JN12	13964578	X	X	X	X	X	X	X	X	X	X	X	X	X	X	X	X	X	X	X	X	X	X	X	X	X	X	X	X	X	X	X	X	X	X	X	X	X	X	X	X	X	X	X	X
A	13983718	01	24SE12	13964574	X	X	X	X						X	X		X			X	X	X	X	X		X	X	X	X	X	X	X			X			X		X					X	X		X	X	X	X	X
C	13983899	01	24SE12	13964576	X	X	X	X					X	X	X			X		X	X	X				X	X	X	X	X	X	X			X	X	X	X	X	X						X		X	X	X	X	X
C	13983900	01	24SE12	13964576	X	X	X	X		X			X	X	X			X		X	X	X				X	X	X	X	X	X	X			X	X	X	X	X	X						X		X	X	X	X	X
C	15504308	01	26OC12	13964576	X	X	X	X					X	X	X			X		X	X	X				X	X	X	X	X	X	X			X	X	X	X	X	X						X		X	X	X	X	X
G	15531656	01	11MR13	13964578	X	X			X	X	X	X	X	X			X								X	X			X	X	X	X	X			X	X	X		X	X	X	X	X	X	X			X	X		
G	15531657	01	11MR13	13964578	X	X			X	X	X	X	X	X			X								X	X			X	X	X	X	X			X	X	X		X	X	X	X	X	X	X			X	X		
G	15531658	01	11MR13	13964578	X	X	X		X	X	X	X	X	X			X								X	X			X	X	X	X	X			X	X	X		X	X	X	X	X	X	X			X	X		
G	15531659	01	11MR13	13964578	X	X	X		X	X	X	X	X	X			X								X	X			X	X	X	X	X			X	X	X		X	X	X	X	X	X	X			X	X		
G	15531660	01	11MR13	13964578	X	X			X	X	X	X	X	X			X								X	X			X	X	X	X	X			X	X	X		X	X	X	X	X	X	X			X	X		
G	15531661	01	11MR13	13964578	X	X			X	X	X	X	X	X			X								X	X			X	X	X	X	X			X	X	X		X	X	X	X	X	X	X			X	X		
G	15531662	01	11MR13	13964578	X	X			X	X	X	X	X	X			X								X	X			X	X	X	X	X			X	X	X		X	X	X	X	X	X	X			X	X		
G	15531663	01	11MR13	13964578	X	X			X	X	X	X	X	X			X								X	X			X	X	X	X	X			X	X	X		X	X	X	X	X	X	X			X	X		
G	15531664	01	11MR13	13964578	X	X			X	X	X	X	X	X	X	X	X							X	X	X	X	X	X	X	X	X	X			X	X	X	X	X	X	X	X	X	X	X	X	X	X	X	X	X
E	15538209	01	10AP13	13964577	X		X		X	X	X	X					X	X	X	X					X	X			X	X	X	X				X						X	X	X	X	X			X	X		
A	35013577	01	06AU10	13839467	X	X	X	X						X	X		X			X	X	X	X						X	X	X	X			X	X		X	X	X					X	X	X	X	X			
C	35212376	01	13AU18	13964576	X	X	X	X					X	X	X		X	X		X	X	X	X						X	X	X	X			X	X	X	X	X	X						X		X	X			
C	35249453	01	13AU18	13964576	X	X	X	X					X	X	X		X	X		X	X	X	X					X	X	X	X	X			X	X	X	X	X	X				X		X		X	X			

POS.	CONNECTOR 96WAY CONNECTOR 96POL	49	50	51	52	53	54	55	56	57	58	59	60	61	62	63	64	65	66	67	68	69	70	71	72	73	74	75	76	77	78	79	80	81	82	83	84	85	86	87	88	89	90	91	92	93	94	95	96	
A	13839471	X	X	X	X	X	X	X	X	X	X	X	X	X	X	X	X	X	X	X	X	X	X	X	X	X	X	X	X	X	X	X	X	X	X	X	X	X	X	X	X	X	X	X	X	X	X	X	X	
C	13839472	X	X	X	X	X	X	X	X	X	X	X	X	X	X	X	X	X	X	X	X	X	X	X	X	X	X	X	X	X	X	X	X	X	X	X	X	X	X	X	X	X	X	X	X	X	X	X	X	
E	13839473	X	X	X	X	X	X	X	X	X	X	X	X	X	X	X	X	X	X	X	X	X	X	X	X	X	X	X	X	X	X	X	X	X	X	X	X	X	X	X	X	X	X	X	X	X	X	X	X	
G	13839474	X	X	X	X	X	X	X	X	X	X	X	X	X	X	X	X	X	X	X	X	X	X	X	X	X	X	X	X	X	X	X	X	X	X	X	X	X	X	X	X	X	X	X	X	X	X	X	X	
A	13944904	X	X	X	X		X	X		X	X	X		X	X	X		X	X		X	X	X			X	X	X	X		X	X		X	X	X										X	X	X	X	(2)
C	13944905	X	X	X	X		X	X	X	X	X	X	X	X	X	X	X	X	X		X	X	X	X	X	X	X	X			X	X	X	X	X	X							X		X	X	X	X	X	(2)
C	13944906	X	X	X	X		X	X	X	X	X	X		X	X	X	X	X	X		X	X	X			X	X	X			X	X	X	X	X	X							X			X	X	X	X	(2)
A	13953457	X	X	X	X	X	X	X	X	X	X	X	X	X	X	X	X	X	X	X	X	X	X	X	X	X	X	X	X	X	X	X	X	X	X	X	X	X	X	X	X	X	X	X	X	X	X	X	X	(3)
C	13953459	X	X	X	X	X	X	X	X	X	X	X	X	X	X	X	X	X	X	X	X	X	X	X	X	X	X	X	X	X	X	X	X	X	X	X	X	X	X	X	X	X	X	X	X	X	X	X	X	(3)
E	13953460	X	X	X	X	X	X	X	X	X	X	X	X	X	X	X	X	X	X	X	X	X	X	X	X	X	X	X	X	X	X	X	X	X	X	X	X	X	X	X	X	X	X	X	X	X	X	X	X	(3)
G	13953462	X	X	X	X	X	X	X	X	X	X	X	X	X	X	X	X	X	X	X	X	X	X	X	X	X	X	X	X	X	X	X	X	X	X	X	X	X	X	X	X	X	X	X	X	X	X	X	X	(3)
A	13953463	X	X	X	X		X	X		X	X	X		X	X	X		X	X		X	X	X			X	X	X	X		X	X		X	X	X										X	X	X	X	(3)
C	13953464	X	X	X	X		X	X	X	X	X	X	X	X	X	X	X	X	X		X	X	X	X	X	X	X	X			X	X	X	X	X	X							X		X	X	X	X	X	(3)
C	13953465	X	X	X	X		X	X	X	X	X	X		X	X	X	X	X	X		X	X	X			X	X	X			X	X	X	X	X	X							X			X	X	X	X	(3)
A	13964569	X	X	X	X	X	X	X	X	X	X	X	X	X	X	X	X	X	X	X	X	X	X	X	X	X	X	X	X	X	X	X	X	X	X	X	X	X	X	X	X	X	X	X	X	X	X	X	X	(4)
C	13964571	X	X	X	X	X	X	X	X	X	X	X	X	X	X	X	X	X	X	X	X	X	X	X	X	X	X	X	X	X	X	X	X	X	X	X	X	X	X	X	X	X	X	X	X	X	X	X	X	(4)
E	13964572	X	X	X	X	X	X	X	X	X	X	X	X	X	X	X	X	X	X	X	X	X	X	X	X	X	X	X	X	X	X	X	X	X	X	X	X	X	X	X	X	X	X	X	X	X	X	X	X	(4)
G	13964573	X	X	X	X	X	X	X	X	X	X	X	X	X	X	X	X	X	X	X	X	X	X	X	X	X	X	X	X	X	X	X	X	X	X	X	X	X	X	X	X	X	X	X	X	X	X	X	X	(4)
A	13983718	X	X	X	X		X	X		X	X	X		X	X	X		X	X		X	X	X			X	X	X	X		X	X		X	X	X										X	X	X	X	(5)
C	13983899	X	X	X	X		X	X	X	X	X	X	X	X	X	X	X	X	X		X	X	X	X	X	X	X	X			X	X	X	X	X	X							X		X	X	X	X	X	(5)
C	13983900	X	X	X	X		X	X	X	X	X	X		X	X	X	X	X	X		X	X	X			X	X	X			X	X	X	X	X	X							X			X	X	X	X	(5)
C	15504308	X	X	X	X		X	X	X	X	X	X		X	X	X	X	X	X		X	X	X			X	X	X			X	X	X	X	X	X							X			X	X	X	X	(6)
G	15531656	X	X	X	X	X	X	X		X					X	X	X	X	X	X						X		X	X	X	X	X		X	X	X					X	X	X		X	X	X			(7)
G	15531657	X	X	X	X	X	X	X		X					X	X	X	X	X	X						X		X	X	X	X	X		X	X	X					X	X	X			X	X			(7)
G	15531658	X	X	X	X	X	X	X		X					X	X	X	X	X	X						X		X	X	X		X		X	X	X						X	X			X	X			(7)
G	15531659	X	X	X	X	X	X	X		X					X	X	X	X	X	X						X		X	X	X	X	X		X	X	X					X	X	X		X	X	X			(7)
G	15531660	X	X	X	X	X	X	X		X					X		X	X								X		X	X	X	X	X		X	X	X					X	X	X		X					(7)
G	15531661	X	X	X	X	X	X	X		X					X		X	X								X		X	X	X	X	X		X	X	X					X	X								(7)
G	15531662	X	X	X	X	X	X	X		X					X	X	X	X	X	X						X		X	X	X		X		X	X	X					X	X	X		X	X				(7)
G	15531663	X	X	X	X	X	X	X		X					X		X	X								X		X	X	X		X		X	X	X					X	X								(7)
G	15531664	X	X	X	X	X	X	X	X	X	X	X	X		X		X	X						X	X	X	X	X	X	X		X		X	X	X			X	X	X	X							X	X	(7)
E	15538209	X	X	X	X	X	X			X					X											X		X	X	X		X		X	X		X	X												(8)
A	35013577	X	X	X			X	X		X	X	X		X	X	X		X	X		X	X	X	X	X	X	X	X	X		X	X		X	X	X							X			X	X	X	X	(9)
C	35212376	X	X	X	X		X	X		X	X	X		X	X	X	X	X	X	X	X	X	X	X	X	X	X	X			X	X		X	X	X			X				X		X	X	X	X	X	(10)
C	35249453	X	X	X	X		X	X		X	X	X	X	X	X	X	X	X		X	X	X	X	X	X	X	X	X			X	X		X	X	X			X				X		X	X	X	X	X	(10)

KEY PRODUCT CHARACTERISTICS

SAFETY/COMPLIANCE	FIT/FUNCTION	TOTAL ON DRAWING: 0
S/C CHECKPOINTS	F/F CHECKPOINTS	LAST NO. USED: 0

NO & TYPE	DESCRIPTION	RATIONALE	PTS	ZONE
- -	- -	- -	-	-

DELPHI D - 42119 WUPPERTAL

REMARKS:
- IN CASE OF PART MODIFICATION CHECK ASSEMBLY TOOLS AND TEST EQUIPMENT AT THE CUSTOMER AND THE SUPPLIER
- MARK PLASTIC PARTS PER VDA 260

BEMERKUNGEN:
- BEI ARTIKELAENDERUNG AUF MONTAGE UND PRUEFEQUIPMENT BEIM KUNDEN SOWIE BEIM LIEFERANTEN ACHTEN
- KUNSTSTOFFTEILE NACH VDA 260

A LINE DRAWN THROUGH A PART NUMBER INDICATES THAT PHYSICAL PARTS ARE NOT AVAILABLE FOR ORDERING.
PART NUMBERS THAT DO NOT HAVE A LINE PRESENT INDICATE THAT PHYSICAL PARTS ARE AVAILABLE FOR ORDERING.
CONTACT DELPHI SALES TO ASSURE AVAILABILITY OF PARTS.
MIT EINER LINIE DURCHGESTRICHENE PART-NR. GEKENNZEICHNET, DASS DIESE PART-NR. NICHT BESTELLT WERDEN KANN.
PART-NR. DIE KEINE LINIE ZEIGEN, KENNZEICHNEN, DAS TEILE ZUR BESTELLUNG VERFUEGBAR SIND.
FUER VERFUEGBARKEIT DER PARTS DEN EINKAUF VON DELPHI KONTAKTIEREN.

R 0.1 MAX
R 0.2 MAX
SHARP CORNER TOLERANCE

DIN TO CHECK PRUEFMASSE / DIN FOR HELP HILFSMASSE / THEORETIC DIN THEORE. MASSE	DIMENSIONAL RANGE (MM) FROM TO	>0 20	>20 30	>30 70	>70 100	>100 150	>150 200	>200 250	>250 300	>300 400
	TOLERANCE UNLESS OTHERWISE SPECIFIED	±0.15	±0.2	±0.3	±0.4	±0.5	±0.6	±0.8	±1	±1.2

CHART E1
ANGULAR TOLERANCE ±2°

SCALE / MASZSTAB: 1:1

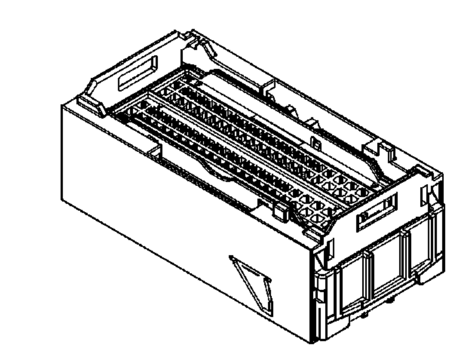

DWG TYP: CUSTOMER PART DRAWING
WEIGHT [GR]: 65.7
VOLUME [CM³]: ---
ROUTING: ---
DISTR CODE: L

UNLESS OTHERWISE SPECIFIED

GENERAL TOLERANCES ACCORDING TO:
SEE CHART
SIEHE TABELLE

GD&T ACCORDING TO:
ISO 1101

KZUS-DRAWING

REFERENCE

FIRST ANGLE PROJECTION

DO NOT SCALE
USE MATH DATA
CAD
NX

DELPHI
DELPHI DEUTSCHLAND GMBH
D-42119 WUPPERTAL

COPYRIGHT 2010 DELPHI CORPORATION AND/OR ITS AFFILIATES.
ALL RIGHTS RESERVED.
REVISED 2018
THIS DRAWING IS THE PROPERTY OF DELPHI CORPORATION AND CONTAINS DELPHI CONFIDENTIAL INFORMATION. THE REPRODUCTION, DISTRIBUTION AND UTILIZATION OF THIS DOCUMENT OR ITS RELATED CAD MATH DATA, AS WELL AS COMMUNICATION OF ANY CONTENT TO OTHERS, WITHOUT EXPRESS AUTHORIZATION, IS PROHIBITED.
DIESE ZEICHNUNG IST EIGENTUM DER FIRMA DELPHI UND ENTHAELT DELPHI VERTRAULICHE INFORMATIONEN. DIE REPRODUKTION, VERTEILUNG UND NUTZUNG DIESES DOKUMENTES ODER DEREN ZUGEHOERIGEN CAD DATEN, ODER AUCH ALS KOMMUNIKATION VON BELIEBIGEN INHALT ZU ANDEREN, IST OHNE BERECHTIGUNGSPRUEFUNG DURCH DIE DELPHI CORPORATION UNZULAESSIG.

		DATE
DR	K.BORCHARDT	06AU10
APVD1	K.STORANDT	09AU10
APVD2	SYS.	10AU10
APVD3		
APVD4		
APVD5		

SUBSTANCES OF CONCERN AND RECYCLED CONTENT PER DELPHI 10949001
POTENTIELL GEFAEHRLICHE STOFFE UND REZYKLATANTEIL GEMAESS DELPHI 10949001

MATERIAL: SEE CHART / SIEHE TABELLE

DRAWING NAME:
CONNECTOR 96 WAY FOR SYSTEM 1.2
CONNECTOR 96 POL. FUER SYSTEM 1.2

DRAWING NUMBER: 13839475

SIZE	SCALE	FRAME NO	SHEET NO	STG	REV	N/P
A0	1:1	1 OF 1	1 OF 1	R	10	

CONTROLLED DOCUMENTS ARE ONLY AVAILABLE ON THE SERVER
User: kz5gtm Part: 13839475-CUS01-S01 Date: 22-Aug-18 Time: 14:21 Message: