Version	Engineer Change No.	Change Description	Date	Approved by

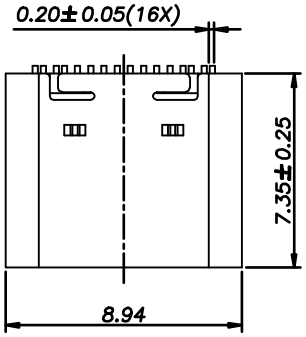

USB TYPE-C PIN ASSIGNMENTS

PIN NUMBER	SIGNAL NAME	PIN NUMBER	SIGNAL NAME
A1	GND	B12	GND
A4	VBUS	B9	VBUS
A5	CC1	B8	SBU2
A6	Dp1	B7	Dn2
A7	Dn1	B6	Dp2
A8	SBU1	B5	CC2
A9	VBUS	B4	VBUS
A12	GND	B1	GND

NOTE:

1.MATERIAL SPECIFICATION:
1.HOUSING:HIGH TEMPERATURE RESISTANT PLASTIC,UL94 V-0.
2.CONTACTS:COPPER ALLOY
4.FRONT SHELL: STAINLESS STEEL

2.MECHANICAL PERFORMANCE,
2-1.INSERTION FORCE: 0.5~2.0kgf.
2-2.REMOVAL FORCE: 0.8kgf~2.0kgf.
2-3.DURABILITY: 10000 CYCLES.

3.ELECTRICAL PERFORMANCE,
3-1. CURRENT RATING:5.0A
VOLTAGE RATING:5.0V
3-2. LLCR:
VBUS & GND PINS AND OTHER PINS: 40mΩ/PIN MAX.
SHIELD: 50mΩ/MAX.
LLCR MAX. CHANGE OF ALL PINS: 10mΩ.
3-3.INSULATION RESISTANCE: 100MΩ MIN
3-4.DIELECTRIC WITHSTAND VOLTAGE,AC 100V FOR 1 MINUTE.

4. ENVIRONMENTAL PERFORMANCE:
OPERATING TEMPERATURE: -45℃~+85℃.

5.IR REFLOW:
THE PEAK TEMPERATURE ON THE BOARD SHALL BE MAINTAINED FOR 10 SECONDS AT 260°C.

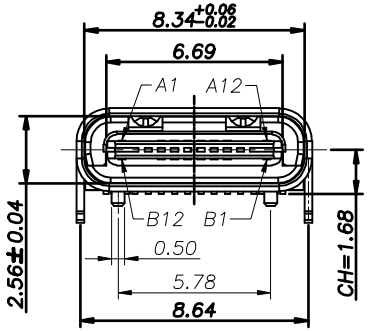

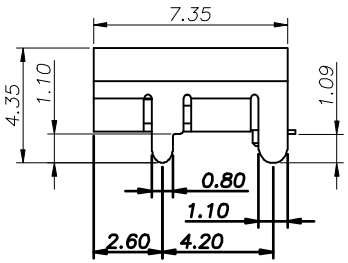

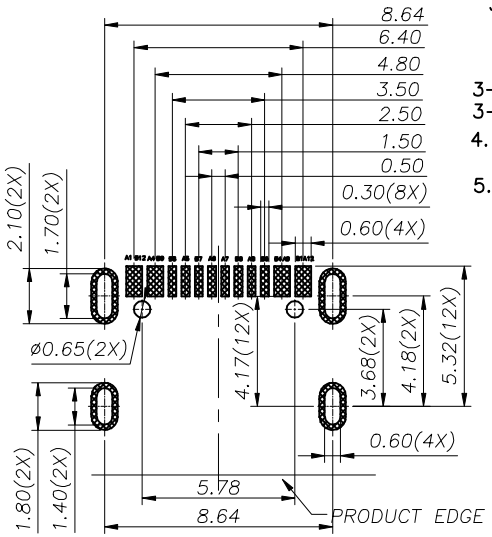

RECOMMENDED PCB LAYOUT(TOP VIEW)
THICKNESS 0.80MM:DEFAULT TOLERANCE:?.05

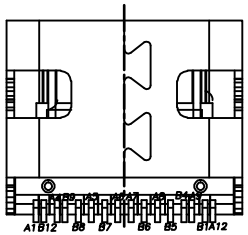

P/N	LOGO	MYLAR	SHELL	CONTACT	SOLDER	PAKING	SHELL MATERIAL
USBC-202N02A00	W/O	W/O	NI	Fu" Au	Fu" Au	REEL	SUS

X.	±0.15	X.°	±2°
.X	±0.10	.X°	±1.5°
.XX	±0.05	.XX°	
.XXX	±0.02	.XXX°	

单位Unit:mm

产品名称Product Name: USB TYPE C 16PIN（一体式）

深圳市连欣科技有限公司
TEL:0755-36610035 FAX:0755-36610036

物料编号Material No.: XUBF-0336-0817B

客户料号Customer Item:

本图纸由公司内部发行，未经允许不得擅自拷贝、改动或带离公司。

核准Approved:	日期Date:	模具编号Tool NO.:	版次Rev.
审核Checked:	日期Date:	工程图号Tool NO.:	A
设计Designed: ZXF	日期Date: 2018,06,18	比例Size:	页面Page: 1/1