REV.	DESCRIPTION	APPD	DATE

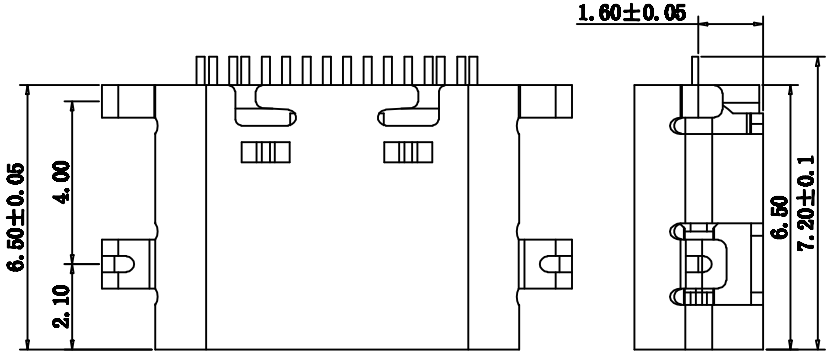

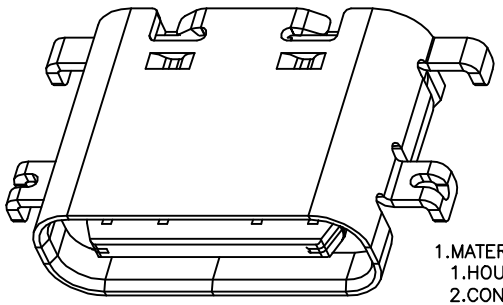

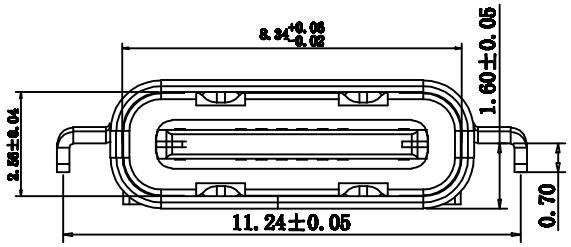

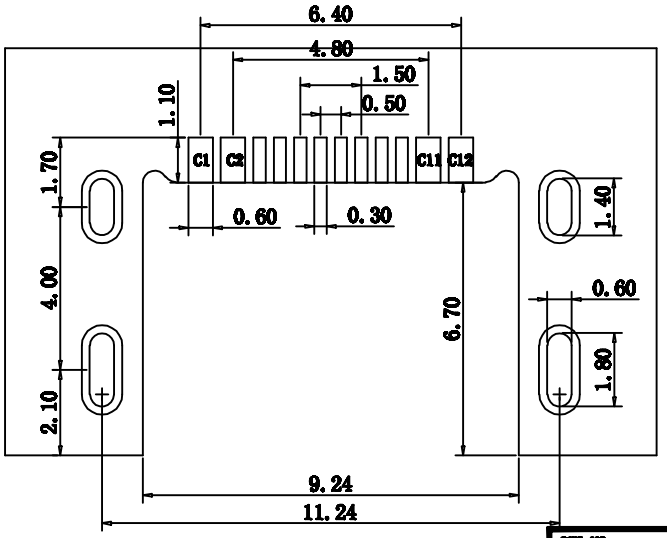

TPS16-N1S1-2016-A

0 普通外壳
1 点焊外壳

S1 半金锡端子
F1 全金端子

1.MATERIAL SPECIFICATION:
1.HOUSING:HIGH TEMPERATURE RESISTANT PLASTIC,UL94 V-0.
2.CONTACTS:COPPER ALLOY
3.MID PLATE: STAINLESS STEEL
4.FRONT SHELL: STAINLESS STEEL

2.PLATING SPECIFICATION:
2-1.CONTACTS:
Ni 40u" MIN. UNDER PLATED OVER ALL.
Au PLATED ON THE FUNCTIONAL AREA OF CONTACT.
(GOLD PLATING THICKNESS FOLLOW THE P/N)
PLATING SPECIFICATIONS OF THE SOLDER AREA FOLLOW THE P/N

2-2.FRONT SHELL:
SEE TABLE1.

2-3.SHIELD PLATE&EMI PLATE:
CLEAR ONLY

3.MECHANICAL PERFORMANCE,
3-1.INSERTION FORCE: 0.5~2.0N.
3-2.REMOVAL FORCE: 0.8N~2.0N.
3-3.DURABILITY: 10000 CYCLES.

4.ELECTRICAL PERFORMANCE,
4-1. CURRENT RATING:5.0A
VOLTAGE RATING:5.0V
4-2. LLCR:
VBUS & GND PINS AND OTHER PINS: 40mΩ/PIN MAX.
SHIELD: 50mΩ/MAX.
LLCR MAX. CHANGE OF ALL PINS: 10mΩ.
4-3.INSULATION RESISTANCE: 100MΩ MIN
4-4.DIELECTRIC WITHSTAND VOLTAGE,AC 100V FOR 1 MINUTE.

5. ENVIRONMENTAL PERFORMANCE:
OPERATING TEMPERATURE: -25°C~+85°C.

6.IR REFLOW:
THE PEAK TEMPERATURE ON THE BOARD SHALL
BE MAINTAINED FOR 10 SECONDS AT 260°C.

16 PIN USB Type-C Receptacle Interface (Front View)

PIN NO.	A1/B12	A4/B9	B8	A5	B7	A6	A7	B6	A8	B5	B4/A9	B1/A12
SIGNAL NAME	GND	Vbus	SBU2	CC1	D-	D+	D-	D+	SBU1	CC2	Vbus	GND
PCB PAD NO.	C1	C2	C3	C4	C5	C6	C7	C8	C9	C10	C11	C12

DWG NO: USB-20160126	MATERIAL:	深圳市连欣科技有限公司	
LOT NO:	FINISH:		
UNIT: MM / SIZE: A4	COLOR:	TITLE: TYPE C 16pin 母座 沉板1.6(钢片)	
TOLERANCES: X.X=±0.35 X.XX=±0.25 X.XXX=±0.15 / GENERAL ANGLE: X.X=±3.0° X.XX=±2.0°	DR: 刘 静		
	CHK:	PART NO: XUBF-0316-2036	REV: A
	APP:	SCALE: 1:1 / SHEET: 1 OF 1	