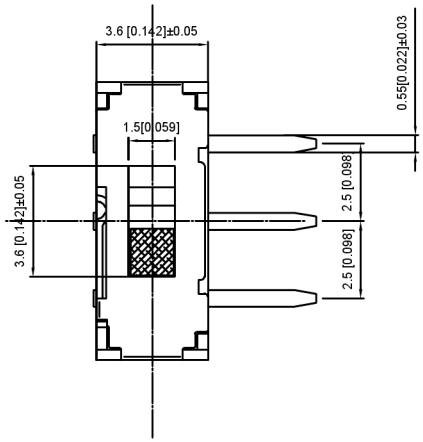

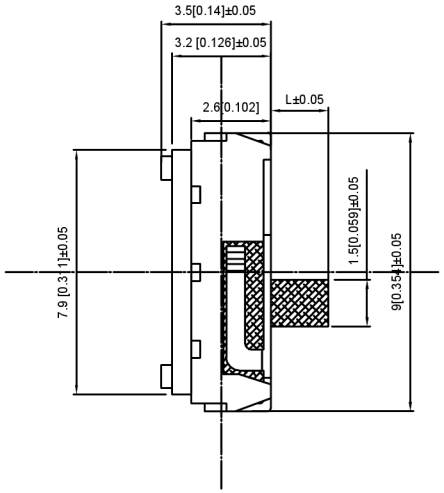

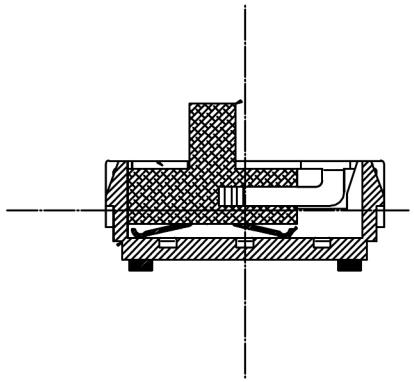

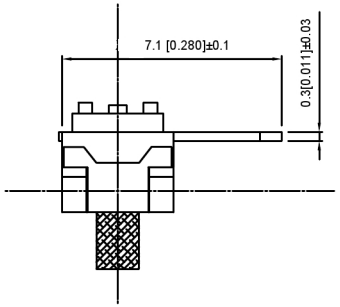

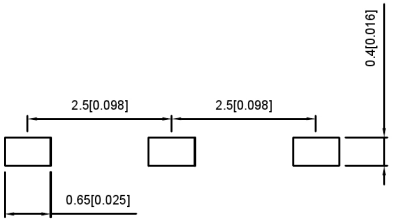

NOTE:
Rating: DC 12V 50mA
Operating Force:200±100gf
Lifetime:10,000 Cycles

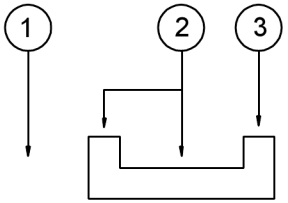

		——				——
		——				——
5	Terminal	——	3	Brass（0.30t）	ag Plated	——
4	Contact spring	——	1	Phosphor branze	ag Plated	——
3	Base	——	1	Pa46	Black	——
2	Cover	——	1	Sus	Natural	——
1	Keystake	——	1	Pa46	Black	——
ITEM	PAPT NAME	TER,NO	QTY	MATERIAL	FINISHING	REMARK

——	new		2015/5/3		A	瀚源
ECN BO.	DESCRIPTION.		DATE.		REV.	
DESIGNED	CHECKED	APPROVAL	DRAWING NUMBER		SCALT: 1/2	SCALE: 3:1
Mikey	Tom	Jerry	PART NAME	SS-1260L2H	UNLESS OTHERWISE SPECIFIED,TOLERANCE:	X. ±0.25 X.x ±0.20 X.xx ±0.15 ANGULAR ±3°
			MODEL NAME	SS-1260L2H		
			3RD ANGLE PROJ	HanElectricity Co.,LTD		FILE.NO.