注: 未经允许禁止传输、复制、编辑该文档，以及利用其内容进行交流

REV	E.C.N NO.	CONTENT	CHK	DATE

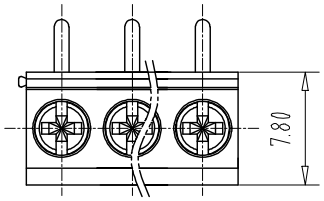

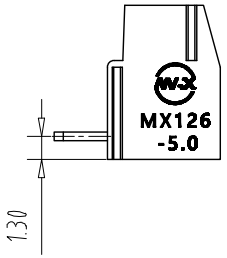

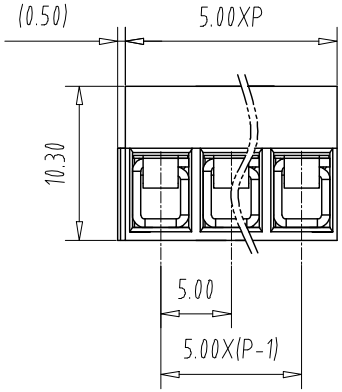

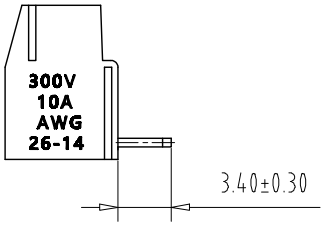

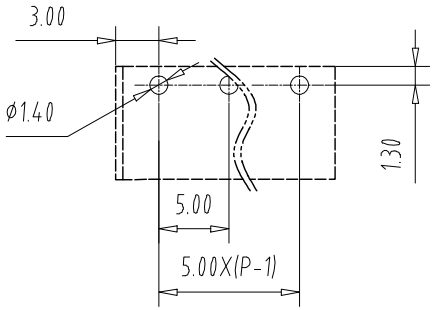

PCB Layout

NOTES1:

UL Standard

1.Rating voltage/current: 300V/10A
2.withstanding voltage: AC1500V/1Min
3.Torque value: M2.5, 3.54Lb.in
4.Wire range: 26～14AWG

IEC Standard

1.

Pollution Degree	3	2	2
Overvoltage Category	Ⅲ	Ⅲ	Ⅱ
Rate Impulse Voltage(KV)	/	/	/
Rate Voltage(V)	/	250V	/
Rate Current(A)	/	10A	/

2. Torque value: M2.5, 0.4Nm
3.wire range: 0.5～2.5mm²

NOTES2:

1.Housing: PA66(UL94V-0)
2.Solder Pin: Copper alloy(Sn Plated)
3.Spring: Stainless Steel
4.Screw: Steel(M2.5,Zn Plated)

NOTES3:

1.Pitch: 5.0mm Poles: 02-24P
2.Stripping length: 6-7mm
3.Operating temperature: -40℃～+105℃
4.RoHS Compliance

How to order

MX126R - 5.0 - XXP - XXXX - XX - X - X

- MX126R: 产品型号
- 5.0: 间距
- XXP: 极数
- XXXX: 颜色: 灰色:GY 蓝色:BU 黑色:BK 绿色:GN 透明色:TT 橙色:OE 红色:RD 透明色:TT 黄色:YW 白色:WE
- XX: 01:常规颜色; 02-99: 定制颜色
- XX: Cu:铜方块 Fe:铁方块
- X: 0:Y一字螺丝 1:S十字螺丝 2:PS平头十字螺丝
- X: A-Z其他定制

Pitch Range In mm			Nominal Dimension Range In mm					— ⌒ ▱
TO 6	Over 6 TO 10	Over 10 TO 24	TO 30	Over 30 TO 60	Over 60 TO 100	Over 100 TO 150	Over 150	0.1/10
								∠
±0.15	±0.20	±0.30	±0.30	±0.50	±0.70	±1.00	±1.30	±2°

ITEM	NAME OF PART		NO. OF PART	Q"TY	MATERIAL		NOTE
DWG.	CKK	DATE	22.09.14	UNITS	MM	SHEET/OF	1/1
CHK.		DATE		SCALE	1:1	A4	
APP.		DATE		NAME	MX126R-5.0-XXP		
CIXI MAIXU ELECTRONICS CO.,LTD. 慈溪市迈旭电子有限公司				DWGNO.			