ROHS

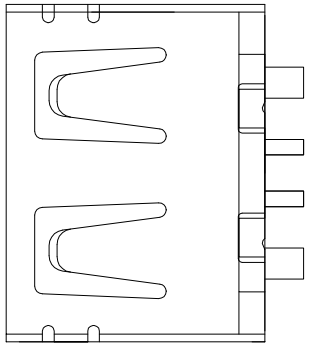

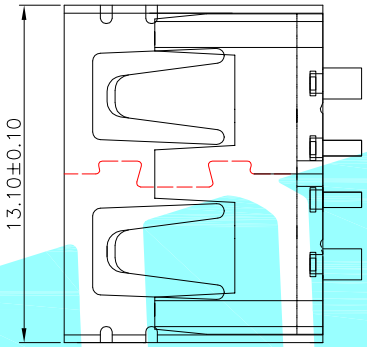

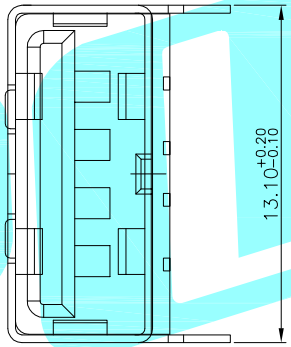

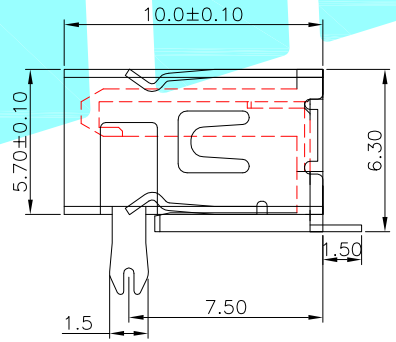

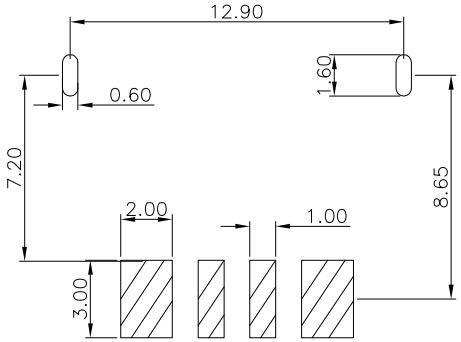

RECOMMENDED P.C.B. LAYOUT

规格说明:Specifications:

电气特性:Electrical:

1.额定电流: Current Rating
3.1A/contact terminal

2.额定电压: Voltage Rating
30V DC

3.接触阻抗:Contact Resistance
30 milliohms MAX

4.耐电压:Dielectnic Withstanding Voitage:
500 V AC AT Sea Levol

5.绝缘阻抗:Lnsulation Resistance:
1000MEGA ohms MIN

物理性能:Mechanical:

1.插拔力: Cnnector Mate and Unmate Force
Mate force:3.57kgf(MAX)
Unmate force:1.02kgf(MIN)

2.端子保持力: Terminal Retenion
1.0kgf(MIN)

PART NO	外壳
U-A-24DS-W-2	铁壳
U-A-24DS-W-2T	铜壳

ITEM	PART NAME	TER'NO.	QTY.	MATERIAL	FINISHING
③	Base	——	1	PA9T	White/black
②	Terminal	——	4	Phosphor Bronze	Ag Plated
①	Housing	——	1	SPCC/Copper	Ni Plated

APPROVALS		DATE	HRO韩荣® ELECTRONICS CO.,LTD
DRAWN	JIANKUN.LU	2018.08.01	
CHECKED			TITLE: USB CONNECTOR
APPROVALS			PART NO.

TOLERANCES ARE			ANGLE	UNIT: mm	SCALE: 1:1	PROJ:
	30~以上	±0.30	±2°	DRAWING NO.	——	SHEET 1 OF 1
	10~30	±0.25				
	5~10	±0.20				
	~ 5	±0.15				

ECN NO.	REV.	DATE.	DESCRIPTION.	CHANGE.	CHECK.	APPRO.
——	A	——	NEW	——	——	——