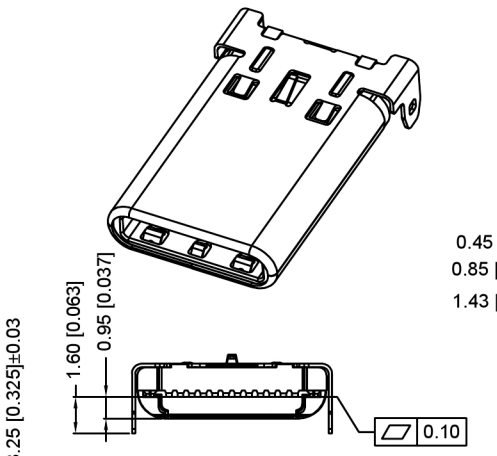

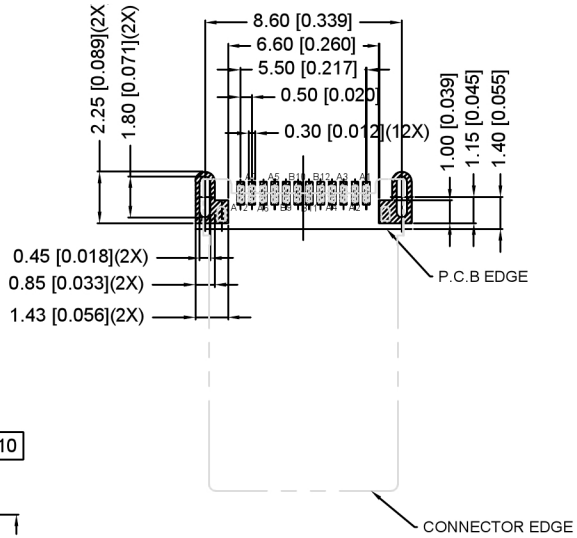

RECOMMENDED PCB LAYOUT(TOP VIEW)

TOLERANCE:±0.05

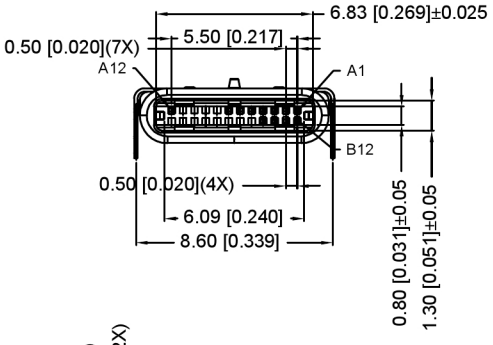

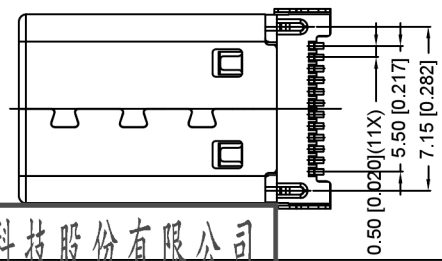

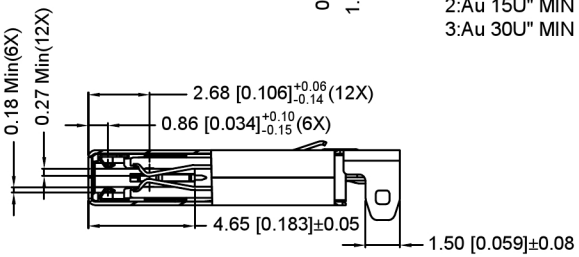

SECTION:A-A
SCALE 1:1

USB TYPE-C PIN ASSIGNMENTS

PIN NUMBER	SIGNAL NAME	PIN NUMBER	SIGNAL NAME
A1	GND	B12	GND
A2	SSTXp1	B11	SSRXp1
A3	SSTXn1	B10	SSRXn1
A4	VBUS	B9	VBUS
A5	CC1	B8	
A6	Dp1	B7	
A7	Dn1	B6	
A8		B5	
A9		B4	
A10		B3	
A11		B2	
A12	GND	B1	

U261-12XN-4BS2S

- 1:WITH
  2:WITHOUT
- B:BLACK
  U:BLUE
  W:WHITE
  C:CREAM-COLOR
- 1:PBT
  2:PA6T
  3:PA9T
  4:LCP
- 1 : Au 1U" ~~MIN~~
  2:Au 15U" MIN
  3:Au 30U" MIN

NOTE:

1.MATERIAL SPECIFICATION:
- 1.HOUSING:HIGH TEMPERATURE RESISTANT PLASTIC,UL94 V-0.
- 2.CONTACTS:COPPER ALLOY
- 3.MID PLATE: STAINLESS STEEL
- 4.FRONT SHELL: STAINLESS STEEL
- 5.EMI PLATE: STAINLESS STEEL

2.PLATING SPECIFICATION:

2-1.CONTACTS:
Ni 50u" MIN. UNDER PLATED OVER ALL.
Au PLATED ON THE FUNCTIONAL AREA OF CONTACT.
(GOLD PLATING THICKNESS FOLLOW THE P/N)
PLATING SPECIFICATIONS OF THE SOLDER AREA FOLLOW THE P/N

2-2.FRONT SHELL:
Ni 30u" MIN. UNDER PLATED OVER ALL.

2-3.MID PLATE:
Ni 50u" MIN. UNDER PLATED OVER ALL.

2-4.EMI PLATE:
CLEAR ONLY

3.MECHANICAL PERFORMANCE,
- 3-1.INSERTION FORCE: 0.5~2.0kgf.
- 3-2.REMOVAL FORCE: 0.8kgf~2.0kgf.
- 3-3.DURABILITY: 10000 CYCLES.

4.ELECTRICAL PERFORMANCE,
- 4-1. CURRENT RATING:3.0A
  VOLTAGE RATING:5.0V
- 4-2. LLCR:
  VBUS & GND PINS AND OTHER PINS: 40mΩ/PIN MAX.
  SHIELD: 50mΩ/MAX.
  LLCR MAX. CHANGE OF ALL PINS: 10mΩ.
- 4-3.INSULATION RESISTANCE: 100MΩ MIN
- 4-4.DIELECTRIC WITHSTAND VOLTAGE,AC 100V FOR 1 MINUTE.

5. ENVIRONMENTAL PERFORMANCE:
OPERATING TEMPERATURE: -25°C~+85°C.

6.IR REFLOW:
THE PEAK TEMPERATURE ON THE BOARD SHALL BE MAINTAINED FOR 10 SECONDS AT 260°C.

广东星坤科技股份有限公司
文件工程章

MARK	DESCRIPTION	DATE	REVISED	APPROVED
修改	日期			

REVISIONS

UNSPECIFIED TOLERANCES	
ANGLAR	±5°
L≤ 4	±0.2
4<L≤ 16	±0.3
16<L≤ 63	±0.4
L> 63	±0.5

www.helloxkb.com www.helloxkb.cn www.xk-dg.cn

XKB INDUSTRIAL PRECISION CO.,LIMITED

DSND		SCALE: N/A	MODEL TYPE: Type-C 3.1
DWN		VIEW:	PART NO.:
CHKD		UNIT: mm/in	DWG NO.: U261-12XN-4BS2S
APPD		SIZE: A4	

WEIGHT	SHEET	REVISIC
	1/1	A0