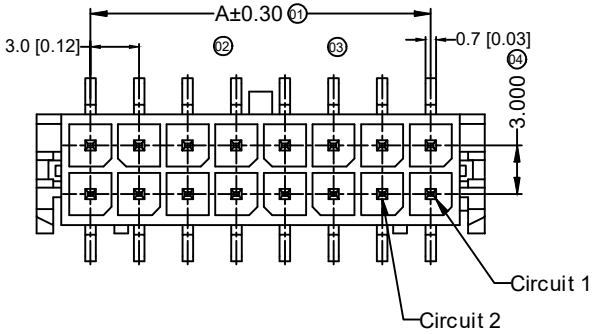

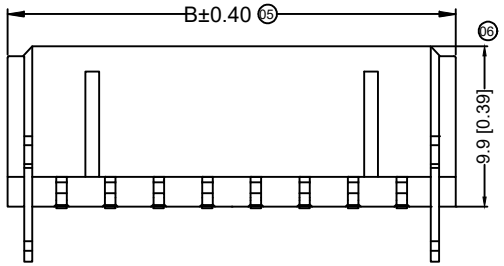

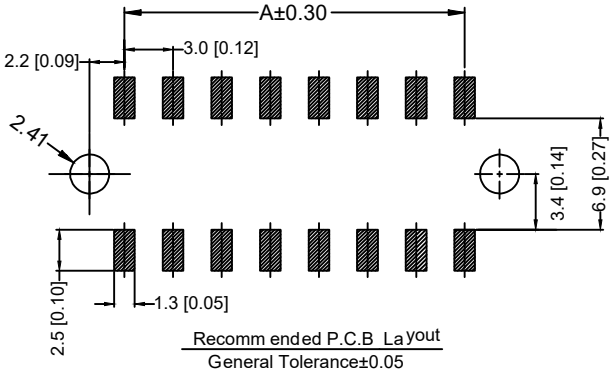

Recommended P.C.B Layout
General Tolerance±0.05

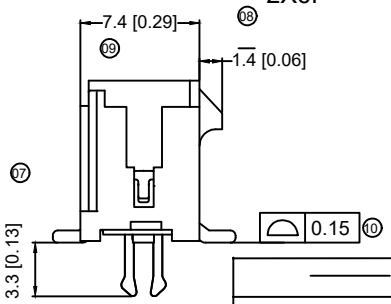

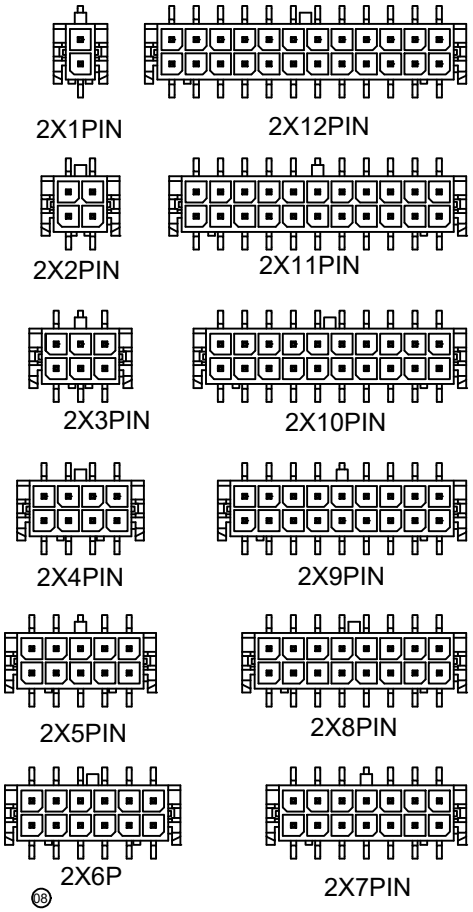

■ Specifications :

- Voltage rating: 250V AC / DC
- Current rating: 5A AC / DC
- Withstanding voltage: 1000V AC/minute
- Temperature range: -25 C 85 C
- Insulation resistance: 1000M
- Contact resistance: 10m
- After environmental testing : 20m

3025 W V S-2XX C
01 02 03 04 05 06

01 Series No.
02 Category : W-wafer
03 Welding Board Angle: V- Stright 180
04 Welding Way: S-SMT
05 Row No.-Pin No.: 2 XX-2 01P 2 12P
06 Plug the Pin Special No.: C-The Harpoon

Poles	Dimensions mm		Poles	Dimensions mm	
	A	B		A	B
2 01	---	6.65	2 07	18.00	24.65
2 02	3.00	9.65	2 08	21.00	27.65
2 03	6.00	12.65	2 09	24.00	30.65
2 04	9.00	15.65	2 10	27.00	33.65
2 05	12.00	18.65	2 11	30.00	36.65
2 06	15.00	21.65	2 12	33.00	39.65

3025WVS-2XXC		Brass	Matte tin	Brass	Matte tin	3025H
3025WVS-2XXC			Tin-Plated		Tin-Plated	
PART N0	Material	Material Pin	Finish Pin	Material Solder Tabs	Finish Solder Tabs	Mates With HY Housing

———	new	2015/5/3	A	Hanyones	
ECN BO.	DESCRIPTION.	DATE.	REV.		
DESIGNED	CHECKED	APPROVAL	DRAWING NUMBER	SCALT: 1/2	SCALE: 3:1
Mikey	Tom	Jerry	PART NAME: 3025WVS-2x05C	UNLESS OTHERWISE SPECIFIED,TOLERANCE:	X. ±0.25
			MODEL NAME: 3025WVS-2x05C		X.x ±0.20
					X.xx ±0.15
					ANGULAR ±3°
			3RD ANGLE PROJ	HANYONES TECH CO.,LTD	FILE. NO.