修订 REV	标记 MARK	修改摘要 REVISION DESCRIPTION	签名 SIGNATURE	日期 DATE
A0		NEW DWG		2016-03-12

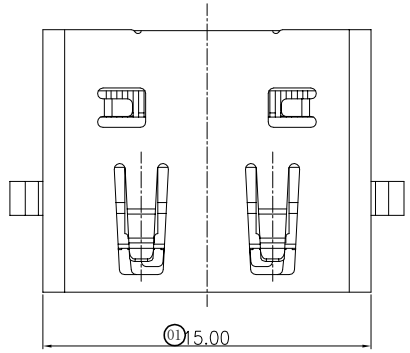

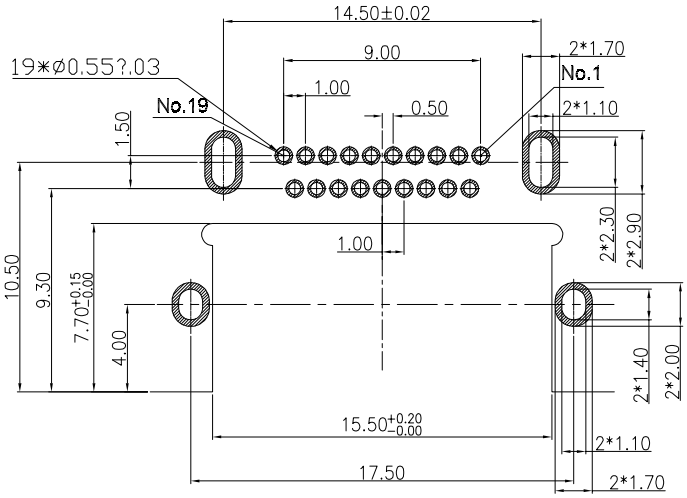

Recommended pcb layout (top view)
(thickness=1.2±0.10mm) (tolerance ±0.05)

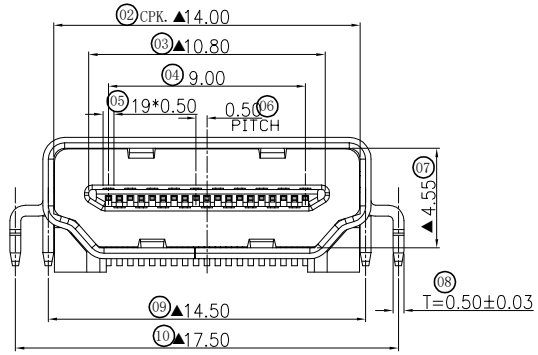

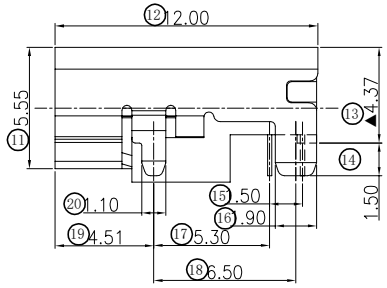

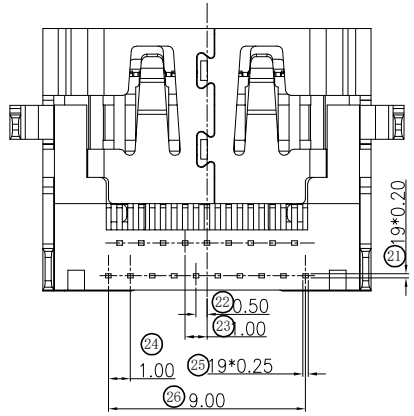

Note:
1.Mechanical characteristics
insertion force: 44.1N max
withdrawal force: 9.8N min, 39.2N max
mating cycle:10000 cycles
2.Electrical characteristics
rating current: 0.5A
rating voltage: 40V
contact resistance: 10 milliohms max
(excluding conductor resistance)
insulation resistance:
a, unmated: 100M Ohms min at 500 VDC
b, mated: 10M Ohms min at 150 VDC
dielectric withstanding voltage: 300V AC/1minute
operating teperature: −20°C~+85°C
storage temperature: −20°C~+65°C
3.material:
HOUSING: THERMOPLASTICS HIGH TEMP LCP+GLASS FIBER BLACK COLOR,UL94V-0
CONTACT: Copper Alloy ,T=0.20MM
SHELL: Copper Alloy(SPCC) ,T=0.5MM

深圳市华德共创科技有限公司
Shenzhen Huade co-create Technology Co.,LTD
电话：0755-23304126 传真：0755-29940187

-TOLERANCES- UNLESS OTHERWISE SPECIFIED 公差参数表				TITLE: 产品名称: HDMI AF正向沉板铜壳镀镍黑胶4.37			
X.X ±0.30	X.X° ±3°	APPD: 核准:		PART NO: 产品编号: HDMI-GD-113PWB			
X.XX ±0.20	X.XX° ±2°	CHECK: 校对:	王建业	DATE	SCALE	UNIT	CODE NUMBER
X.XXX ±0.10	X.XXX° ±1°	DRAW: 绘图:	黄艳兰	2016-03-12	1:1	mm	A001

由 Autodesk 教育版产品制作