REV.	ECN NO.	REVISED	DATE

RoHs 环保

T型

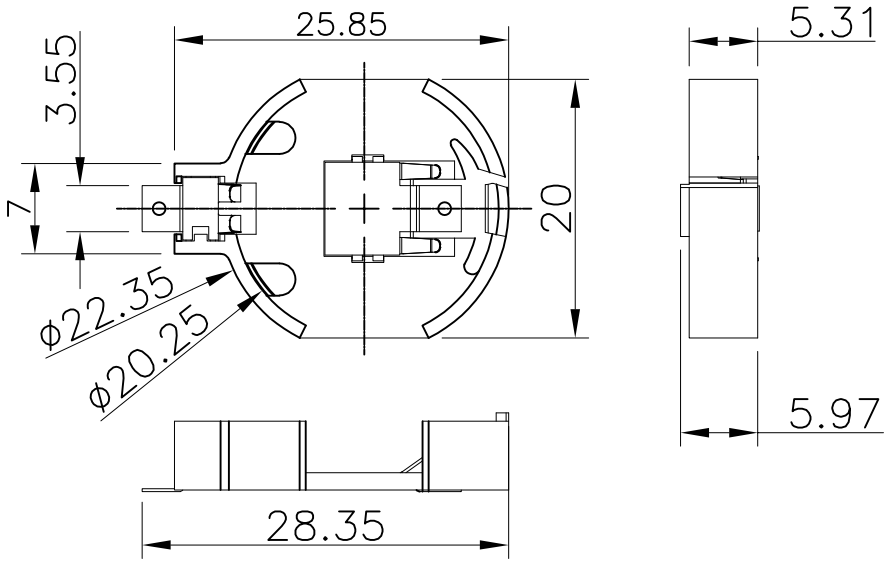

NOTE:

1.MATERIAL:

a.HOUSING:PA9T UL94V-0

b.CONTACT:PHOSPHOR BRONZE;STAINLESS STEEL (SURFACE PLATING: Sn80u"-120u") SEE ORDERING INFORMATION

2.ELECTRIC:

a.CONTACT RESISTANCE: 100 MILLIOHMS MAX

b.INSULATION RESISTANCE: 100 MEGA OHMS MIN

c.DIELECTNIC VOLTAGE: 500V AC ONE SEC LEVEL

d.OPERATING TEMPERATURE: -25° C~ +85° C

ORDERING INFORMATION

BS-13-B5BK001

电池座系列

BS-13系列

SMT 180° TYPE

PLATING:
A-Au1U"
J-Ni100U"~120U"
K-Sn80U"~120U"

MATERIAL:
1A-PBT BLACK
1B-PA66 BLACK
2A-PPA BROWN
2B-PPA BLACK
3A-PPS BROWN
3B-PPS BLACK
4A-LCP WHITE
4B-LCP BLACK
5B-PA9T BLACK

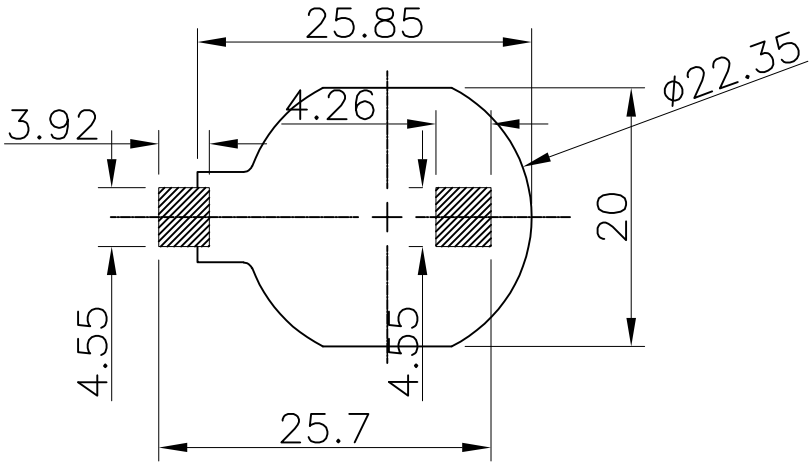

PCB Layout Diagram
Top View

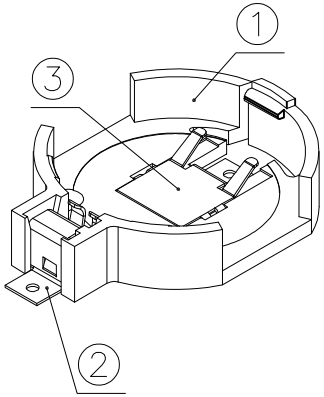

工程部
2022-12-17
H. WANG

NO.	PART NAME	Q'TY	MATERIAL	PLATING & COLOR
3	TERMINAL(-)	1	STAINLESS STEEL, T=0.20mm	Sn-Plating
2	TERMINAL(+)	1	PHOSPHOR BRONZE, T=0.20mm	Sn-Plating
1	HOUSING	1	PA9T UL94V-0	BLACK

UNLESS OTHERWISE SPECIFIED TOLERANCES

DECIMALS: X :±0.30, X.X :±0.25, X.XX :±0.20, X.XXX :±0.10

ANGLES: X :±1°, X.X :±0.5°

WEIGHT: 1.21g

SHEET 1 OF 1

MYOUNG 美阳 www.meiyangdz.com

DSND	YangFeng	DATE	2022-12-17
CHKD	ZhouRuicai	DATE	2022-12-17
APVD	XueShunyong	DATE	2022-12-17
SCALE: 2:1	SIZE: A4	VIEW:	
UNIT: mm	REV.: A/0	OBJECT: MY	

TITLE: BS-2032-13 Sn SMT

PART NO.: BS-13-B5BK001

DRAW NO.:WD-CP-0262