KNSCHA Snap-in Type Aluminum Electrolytic Capacitors

Customer :	◆KNSCHA SLX Series Snap-in Terminal Type Aluminum Electrolytic Capacitors,85°C Standard

PRODUCT CHARACTERISTICS

KNSCHA P/N	Cap. (120Hz) (uF)	Cap. Tol. (%)	Rate Volt. (V-DC)	Surge Volt. (V-DC)	Oper. Temp. (℃)	Nominal Case Size D*L(mm)	Leakage Current Max(uA)	D.F. Max ()	RC 120HZ (Arms)	ESR 100KHZ (Ω)	Normal service life (Hours)
152EC0350	1000	±20	250	300	-25∽85℃	30*40	1500	0.20	3.56	/	2000
152EC0351	10000	±20	50	62	-40∽85℃	30*45	2121	0.25	5.13	/	2000
152EC0352	10000	±20	63	78	-40∽85℃	30*50	2381	0.25	5.20	/	2000
152EC0353	4700	±20	50	62	-40∽85℃	22*35	1454	0.50	2.89	/	2000
152EC0354	390	±20	400	450	-25∽85℃	35*30	1184	0.25	1.184	/	2000

KNSCHA Snap-in Type Aluminum Electrolytic Capacitors

STRUCTURE and MATERIALS

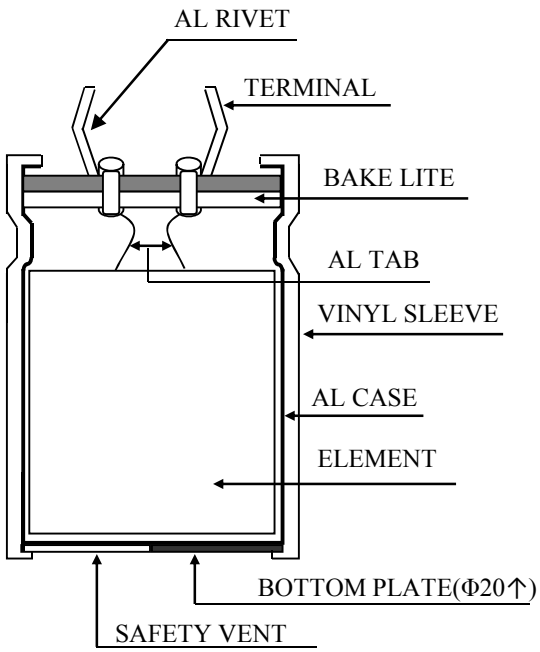

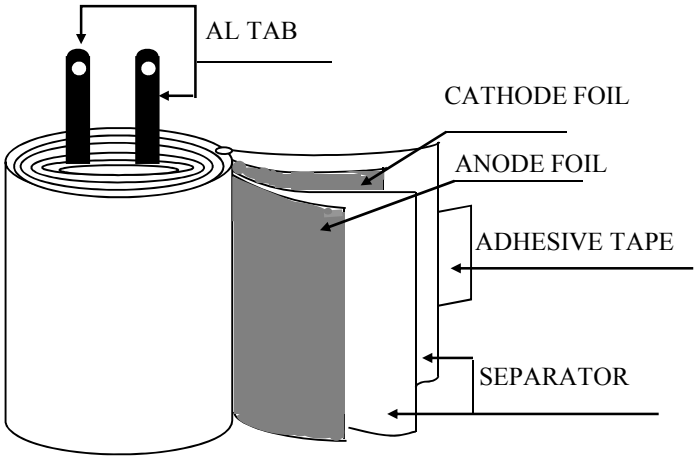

LARGE SIZED TYPE CAPACITORS COMPONENT

PART NAME	MATERIALS
AL RIVET	ALUMINUM 99.9%
TERMINAL	SPCC
BAKE LITE	RUBBER+PAPER LAMINATE
AL TAB	ALUMINUM 99.9% OVER
SLEEVE	INK
	P.E.T (Polyethylene Terephthalate Resin)
AL CASE	ALUMINUM 99.5%
ANODE FOIL	FORMED ALUMINUM 99.9% OVER
CATHODE FOIL	FORMED ALUMINUM 98.4% OVER
SEPARATOR	INSULATION PAPER
ADHESIVE TAPE	POLY PROPYLENE FILM

SLX Series

FEATURES

- Snap-in type, 85℃ 2000 hours standard product.
- Suitable for filter circuit of home appliance, e.g. TV set, audio etc.
- RoHS Compliance

- 基板自立 85℃ 2000小时标准品。
- 适用于家电产品输入/输出电源的滤波回路，如电视机、音响等。

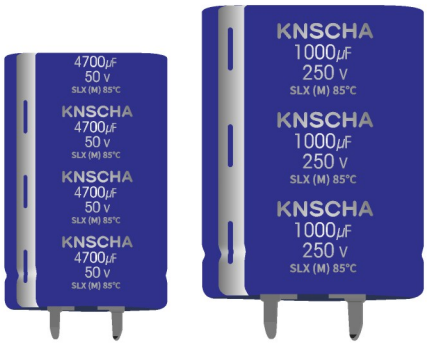

SPECIFICATIONS

Items 项 目	Characteristics 特 性							
Capacitance Tolerance 静电容量误差	± 20%(120Hz,20℃)							
Operating Temperature Range 适用温度范围	-40 ~ +85℃			-25 ~ +85℃				
Rated Voltage Range 额定电压范围	10 ~ 100VDC			160 ~ 500VDC				
Leakage Current 泄漏电流	$I \leqq 3\sqrt{CV}$ (μA) (After 5 minutes application of DC rated voltage, at 20 ℃)							
Dissipation Factor 散逸因素(tan δ)	Measurement Frequency: 120Hz. Temperature: 20℃							
	Rated Voltage(V)	10	16	25	35	50~80	100~250	350~500
	tan δ(Max)	0.50	0.40	0.35	0.30	0.25	0.20	0.25
	When nominal capacitance over 1000μF, tanδ shall be added 0.01 to the listed value with increase of every 1000μF.							
Low Temperature Stability 低温特性 Impedance Ratio(Max) 阻抗比率(最大值)	Measurement Frequency: 120Hz.							
	Rated Voltage(V)	10~100		160~250		350~500		
	Z(-25℃)/Z(20℃)	4		4		8		
	Z(-40℃)/Z(20℃)	12		15		-		
Load Life 负荷寿命	2000hours,with application of rated voltage at 85℃							
	Capacitance Change	Within ± 20% of Initial Value						
	tan δ	200% or less of Initial Specified Value						
	Leakage Current	Initial Specified Value or less						
Shelf Life 放置寿命	The following specifications shall be satisfied when the capacitors are restored to 20℃ after exposing them for 1,000 hours 85℃ without voltage applied. Before the measurement, the capacitor shall be preconditioned by applying voltage according to them 4.1 of JIS C5101-4.							
	Capacitance Change	Within ± 20% of Initial Value						
	tan δ	150% or less of Initial Specified Value						
	Leakage Current	Initial Specified Value or less						
Standards 参照标准	JIS C 5101-4 (IEC 60384)							

Frequency Coefficient of Permissible Ripple Current

Rated Voltage (V)	Frequency (Hz)			
	50	120	1K	≧10K
10 ~ 100	0.88	1.00	1.15	1.15
160 ~ 250	0.85	1.00	1.15	1.20
350 ~ 500	0.88	1.00	1.10	1.15

The endurance of capacitors is reduced with internal heating produced by ripple current at the rate of halving the lifetime with every 5℃ rise.
When long life performance is required in actual use , the rms ripple current has to be reduced.

SLX Series

DIMENSIONS(mm)

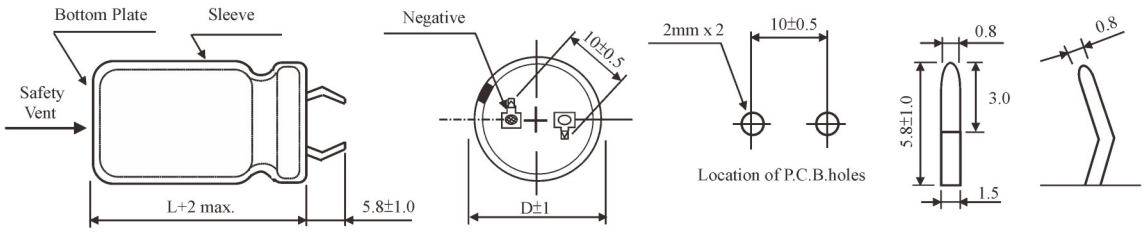

STANDARD RATINGS

D×L(mm) ; R.C.(A rms) at 85°C 120Hz

Cap (μF)	V (Code)	10 (1A)		16 (1C)		25 (1E)		35 (1V)		50 (1H)		63 (1J)		80 (1K)	
	Item	D x L	R.C.	D x L	R.C.	D x L	R.C.	D x L	R.C.	D x L	R.C.	D x L	R.C.	D x L	R.C.
820														22x25	1.34
1000												22x25	1.52	22x25	1.64
1500												22x25	1.68	22x30 25x25	1.80
2200										22x25	2.08	22x30 25x25	2.58	22x35 25x30	2.65
2700										22x30	2.32	22x35 25x30	2.80	22x40 25x30	2.82
3300										22x30 25x25	2.65	22x40 25x30	2.88	22x45 25x40	3.30
3900								22x25	2.44	22x35 25x30	2.72	22x45 25x35	3.15	25x45 30x35	3.40
4700						22x25	2.49	22x30 25x25	2.64	22x40 25x35	3.09	22x50 25x40	3.39	25x50 30x40	3.62
6800				22x25	2.40	22x30 25x25	2.57	22x40 25x30	2.81	22x50 25x40	3.86	25x50 30x40	4.34	30x50 35x40	4.68
8200				22x25	2.90	22x35 25x25	2.96	22x45 25x35	3.12	25x50 30x40	4.42	30x45 35x35	4.84	35x45	4.96
10000		22x25	2.08	22x30	3.08	22x40 25x30	3.40	22x50 25x40	3.55	25x50 30x40	4.98	35x40	5.51	35x50	6.08
12000		22x25	2.40	22x30 25x25	3.50	22x45 25x35	3.61	25x45 30x35	4.02	30x50 35x35	5.16	35x50	6.22		
15000		22x30	2.76	22x35 25x30	3.95	25x45 30x35	4.10	30x40 35x35	5.01	35x45	6.45				
18000		22x35 25x25	3.14	22x40 25x35	4.40	25x45 30x35	4.47	30x45 35x40	5.55	35x50	6.72				
22000		22x40 25x30	3.53	22x50 25x40	4.71	25x50 30x45	5.22	35x45	6.02						
27000		22x45 25x35	4.18	25x45 30x35	5.51	30x50 35x40	6.02	35x50	6.85						
33000		22x50 25x40	5.21	25x50 30x40	5.82	35x45	6.78	35x45	6.95						
39000		25x45 30x35	5.30	30x45 35x35	6.36	35x45	7.60	35x50	7.16						
47000		30x40	5.98	30x50 35x40	6.99	35x50	7.88								
56000		30x45	6.60	35x45	7.17										
68000		35x40	7.28	35x50	10.10										

SLX Series

STANDARD RATINGS

D×L(mm) ; R.C.(mA rms) at 85℃ 120Hz

Cap (μF)	V (Code)	100 (2A)		160 (2C)		200 (2D)		250 (2E)		350 (2V)		400 (2G)		450 (2W)		500 (2H)	
	Item	D x L	R.C.	D x L	R.C.	D x L	R.C.	D x L	R.C.	D x L	R.C.	D x L	R.C.	D x L	R.C.	D x L	R.C.
47												22x25	0.42	22x25	0.46	22x35	0.47
100										22x25	0.77	22x30 25x25	1.05	22x35 25x25	1.10	25x40	1.13
120										22x30 25x25	0.93	22x35 25x25	1.15	22x40 25x30	1.21	25x45	1.25
150								22x25	1.10	22x35 25x30	1.16	22x40 25x30	1.25	22x45 25x35	1.44	25x50 30x35	1.50 1.48
220				22x20	1.12	22x25 25x20	1.37	22x30 25x25	1.44	22x45 25x35	1.47	22x50 25x40	1.76	25x45 30x40	1.77	30x45	1.78
330				22x25 25x20	1.45	22x30 25x25	1.88	22x35 25x30	1.93	25x50 30x40	1.99	30x40 35x30	2.30	30x45 35x40	2.79	35x45	2.81
470				22x30 25x25	1.83	22x40 25x30	2.25	22x45 25x35	2.39	30x50 35x40	2.44	35x45	2.82	35x50	2.92	35x60	3.00
560				22x35 25x30	2.03	22x40 25x30	2.57	25x40 30x35	2.81	35x45	3.29	35x50	3.36	35x55	3.15	35x60	3.03
680		22x25	1.54	22x35 25x30	2.37	22x50 25x40	2.84	25x50 30x40	3.22	35x50	3.44	35x50	3.50				
820		22x25 25x20	1.88	22x40 25x35	2.75	25x45 30x35	3.35	30x45 35x40	3.51	35x50	3.58	35x60	3.83				
1000		22x30 25x25	1.94	25x40 30x35	3.22	25x50 30x40	3.79	30x50 35x45	3.94	35x55	3.89	35x65	4.20				
1200		22x30 25x25	2.11	25x40 30x35	3.41	25x50 30x40	4.08	30x50 35x45	4.45								
1500		22x35 25x30	2.47	30x45 35x35	3.96	30x50 35x40	5.02	35x50	5.36								
2200		22x45 25x40	3.15	35x45	4.68	35x50	6.09										
2700		25x45 30x35	3.72	35x50	5.35												
3300		25x50 30x40	4.06														
3900		30x45 35x35	4.55														
4700		30x50 35x40	5.12														
6800		35x50	5.85														