RoHS

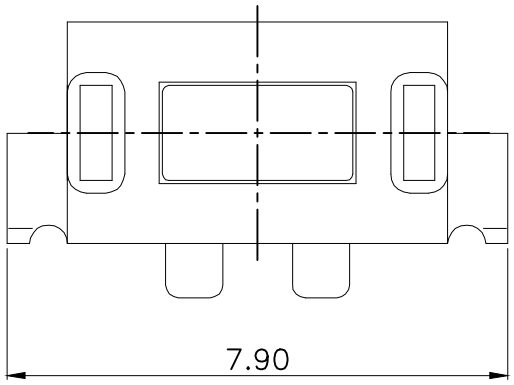

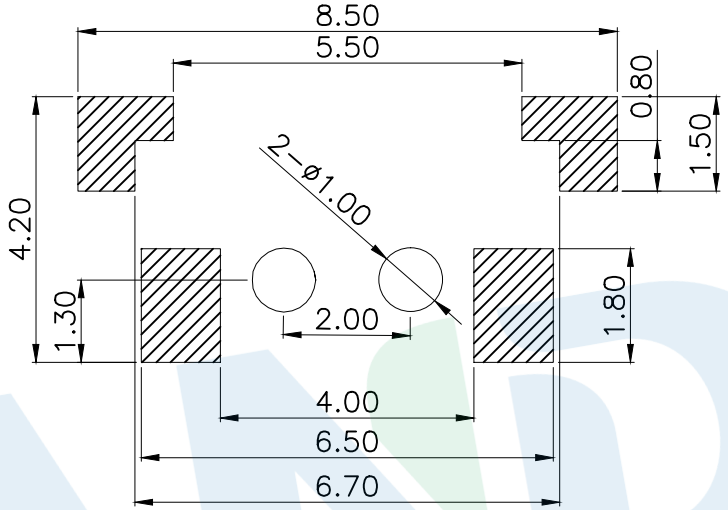

PCB Layout (Pattern Side)

Circuit Diagram

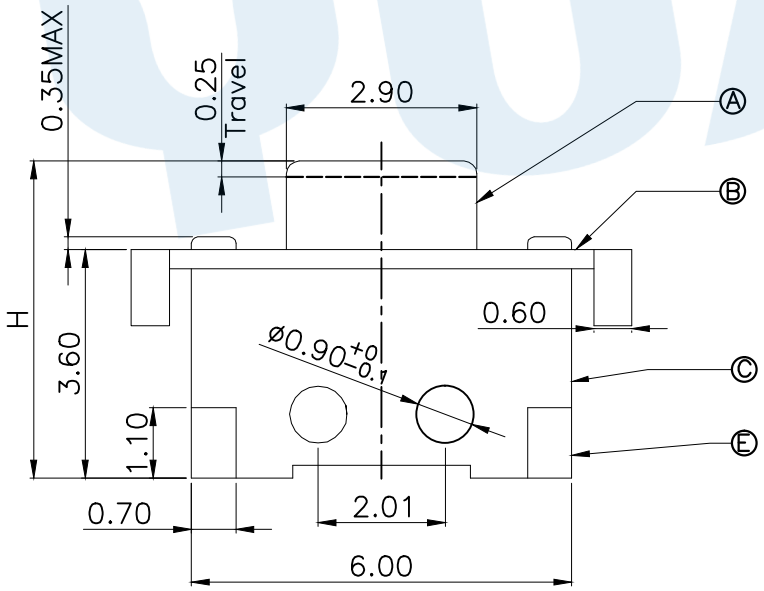

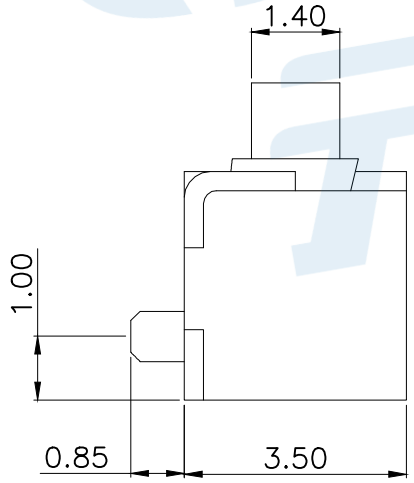

TOTAL HEIGHT	
CODE	H
A1	4.3
A2	5.0

OPERATING FORCE	
CODE	VIGOR
B2	180±30gf
B3	250±30gf

SHRAPNEL	
CODE	MATERIAL/QTY
D2	SUS/1PCS
D4	SUS/2PCS

NO.	Name	Number	Qty	Materil	Remarks
Ⓔ	Terminal		2	Phosphor copper	Silvering
Ⓓ	Contact		1	SUS	Silver covered
Ⓒ	Base		1	PPA	Black
Ⓑ	Cover		1	Phosphor copper	Silvering
Ⓐ	Knob		1	PPA	White

YUANDI® 元迪 Yuandi Electronics Co,Ltd

				angle	±2°	design		date		name	TACT SWITCHS	
				10~30	±0.30	Review		date				
				5~10	±0.20	Approved		date		name	TS-1054-A□B□-D□	
				~ 5	±0.10	Drawing number:						
			modify	Review	Approved	Tolerance not specified	Proportion	1:1	unit	mm	gape number	A4