环保物料

TEL:0769-82001899

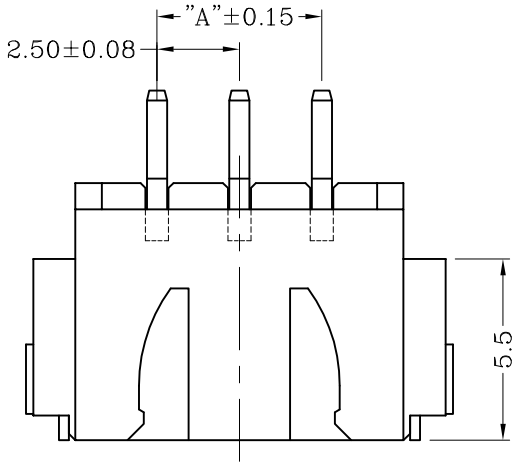

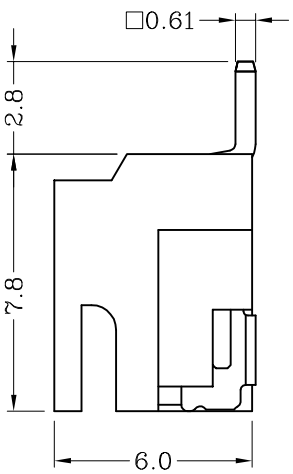

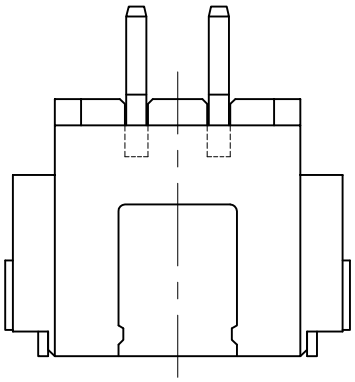

2P

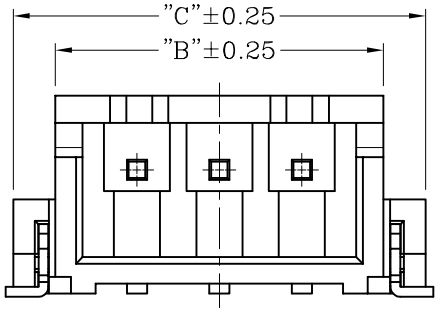

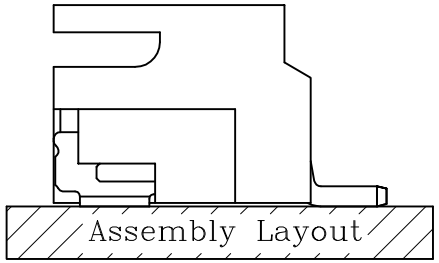

Poles	DIM.A	DIM.B	DIM.C
2	2.50	7.45	10.00
3	5.00	9.95	12.50
4	7.50	12.45	15.00
5	10.00	14.95	17.50
6	12.50	17.45	20.00
7	15.00	19.95	22.50
8	17.50	22.45	25.00
9	20.00	24.95	27.50
10	22.50	27.45	30.00
11	25.00	29.95	32.50
12	27.50	32.45	35.00
13	30.00	34.95	37.50
14	32.50	37.45	40.00
15	35.00	39.95	42.50
16	37.50	42.45	45.00

■ 技术参数 SPECIFICATIONS

- ◆ 适用线规: AWG#28～#22
  Applicable Wire: AWG#28～#22
- ◆ 额定电压: 250V DC,AC(rms)
  Rated voltage: 250V DC,AC(rms)
- ◆ 额定电流: 3A (AWG #22)
  Rated Current: 3A (AWG #22)
- ◆ 耐压值: 1000V AC/minute
  Withstand voltage: 1000V AC/min.
- ◆ 工作温度: −25°C ～ +85°C
  Working Temp : −25°C ～ +85°C
- ◆ 绝缘电阻: ≥1000 MΩ
  Insulation resistance: ≥1000 MΩ
- ◆ 接触电阻: ≤20 mΩ
  Contact resistance: ≤20 mΩ

■ 材料 MATERIAL

- ◆ 绝缘体: 尼龙9T UL94−V0
  Insulator: Nylon9T, UL94−V0
- ◆ 接触针: 黄铜
  Contact PIN: Brass
- ◆ 焊片: 磷铜
  Solder tab: Phosphor bronze

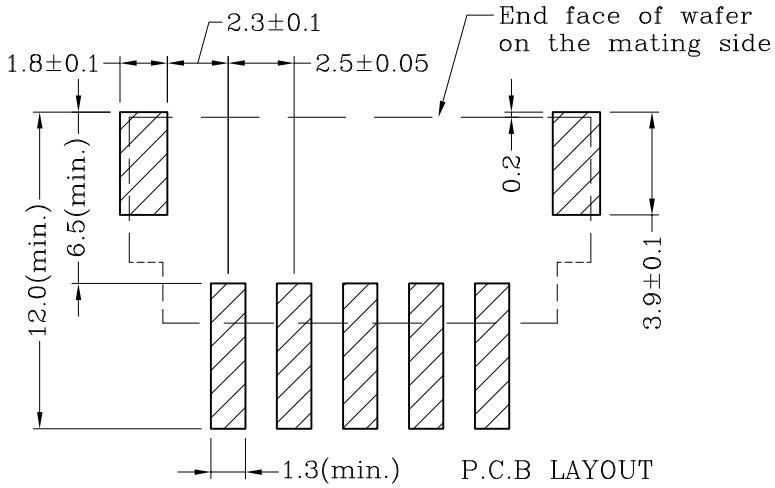

P.C.B LAYOUT

A0			
VER	MODIFICATION	DRAW	DATE

TOLERANCE UNLESS OTHERWISE

X.	±0.30	X°	±5°
.X	±0.20	.X°	±2°
.XX	±0.08	.XX°	±1°
.XXX	±0.03	.XXX°	±0.5°

DRAWN	CK tan
CHKD	
APPD	
VIEW	

XFCN兴飞连接器有限公司
CONNECTORS XFCN CONNECTORS CO., LTD.

PRODUCT NAME	2.50mm Crimp Style Connectors
PART. NO.	M2501RS-XX

SHEET	1/1
DATE	2010. 4. 12
UNITS	mm
SCALE	1:1
DWG NO.	009