环保物料

TEL:0769-82001899

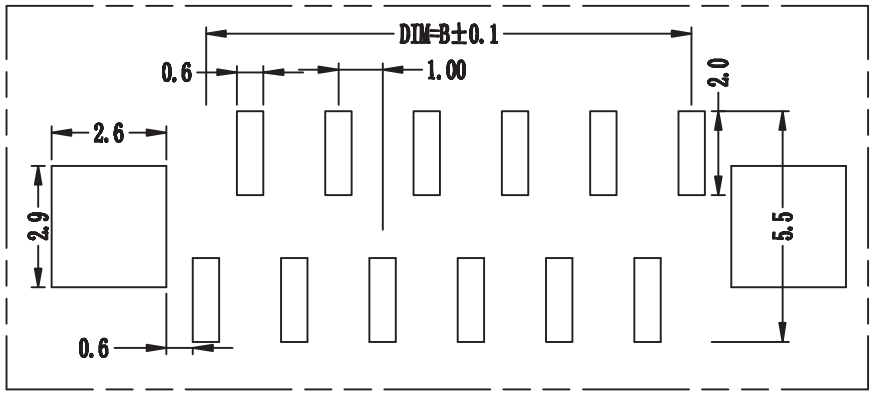

PCB Layout 正脚

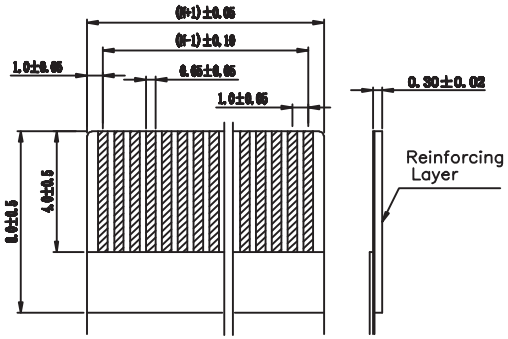

RECOMMENDED FFC/FPC DIM.

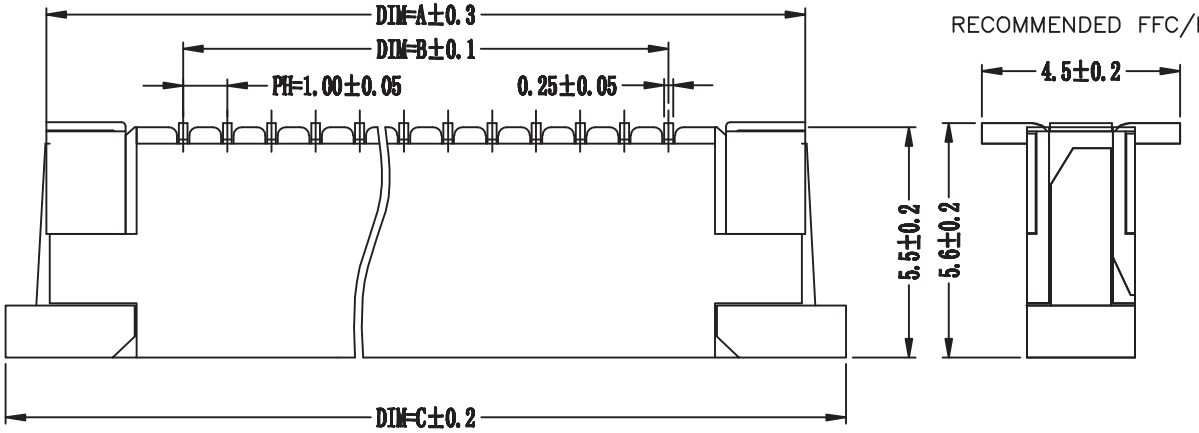

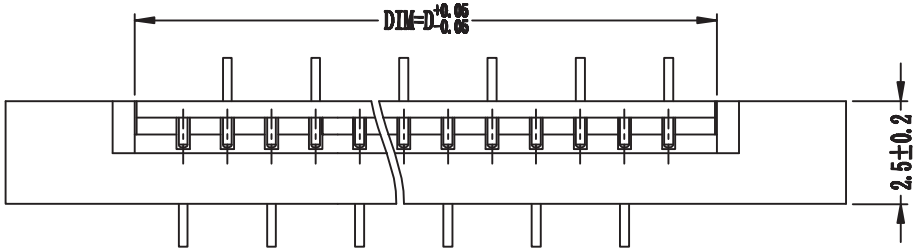

Electrical Characteristics:
Current rating: 0.5A AC/DC
Voltage rating: 50V AC/DC
Temperature range: −25°C~+85°C
Withstand Voltage: 500V AC/Minute
Contact Resistance: ≤ 30mΩ
Insulation resistance: ≥ 500mΩ
Relative Humidity: 93%+40°C

Material Description:
Contact: Phosphor Bronze Tin−Leadplated
Housing: HEIGHT TEMP. PLASTIC(UL94V−0)
Slider: HEIGHT TEMP. PLASTIC(UL94V−0)

PIN数	DIM=A	DIM=B	DIM=C	DIM=D
40P	45.2	39.0	47.0	41.1
39P	44.2	38.0	46.0	40.1
38P	43.2	37.0	45.0	39.1
37P	42.2	36.0	44.0	38.1
36P	41.2	35.0	43.0	37.1
35P	40.2	34.0	42.0	36.1
34P	39.2	33.0	41.0	35.1
33P	38.2	32.0	40.0	34.1
32P	37.2	31.0	39.0	33.1
31P	36.2	30.0	38.0	32.1
30P	35.2	29.0	37.0	31.1
29P	34.2	28.0	36.0	30.1
28P	33.2	27.0	35.0	29.1
27P	32.2	26.0	34.0	28.1
26P	31.2	25.0	33.0	27.1
25P	30.2	24.0	32.0	26.1
24P	29.2	23.0	31.0	25.1
23P	28.2	22.0	30.0	24.1
22P	27.2	21.0	29.0	23.1
21P	26.2	20.0	28.0	22.1
20P	25.2	19.0	27.0	21.1
19P	24.2	18.0	26.0	20.1
18P	23.2	17.0	25.0	19.1
17P	22.2	16.0	24.0	18.1
16P	21.2	15.0	23.0	17.1
15P	20.2	14.0	22.0	16.1
14P	19.2	13.0	21.0	15.1
13P	18.2	12.0	20.0	14.1
12P	17.2	11.0	19.0	13.1
11P	16.2	10.0	18.0	12.1
10P	15.2	9.0	17.0	11.1
9P	14.2	8.0	16.0	10.1
8P	13.2	7.0	15.0	9.1
7P	12.2	6.0	14.0	8.1
6P	11.2	5.0	13.0	7.1
5P	10.2	4.0	12.0	6.1
4P	9.2	3.0	11.0	5.1

VER	MODIFICATION	DRAW	DATE
A0			

TOLERANCE UNLESS OTHERWISE

X.	±0.30	X°	±5°
.X	±0.20	.X°	±2°
.XX	±0.08	.XX°	±1°
.XXX	±0.03	.XXX°	±0.5°

DRAWN	CK tan
CHKD	
APPD	
VIEW	

XFCN兴飞连接器有限公司
CONNECTORS XFCN CONNECTORS CO., LTD.

PRODUCT NAME	FPC 1.00mm Connectors
PART. NO.	F1003-ZV-XX-25T

SHEET	1/1
DATE	2010.4.12
UNITS	mm
SCALE	1:1
DWG NO.	009