HSF

NOTE:
1.MATERIAL:
1.1 INSULATOR: LCP+30%G.F, UL94V-0; BLACK.
1.2 CAP: LCP+30%G.F, UL94V-0; BLACK.
1.3 CONTACT: PHOSPHOR BRONZE.
1.4 MOUNTING EAR: PHOSPHOR BRONZE.
2.FINISH:
2.1 CONTACT: 3u" OR 5u" MIN. GOLD PLATED IN CONTACT AREA
B3 80u" MIN. TIN PLATED IN SOLDER AREA
50u" MIN. NICKEL UNDERPLATED OVERALL.
2.2 MOUNTING EAR: 100u" MIN. TIN PLATED OVER
50u" MIN. NICKEL UNDERPLATED OVERALL.
3.ELECTRICAL CHARACTERISTICS
3.1 CURRENT RATING: 0.5A.
3.2 CONTACT RESISTANCE: 65mΩ MAX.
3.3 INSULATION RESISTANCE: 1000MΩ MIN DC500V.
3.4 DIELECTRIC WITHSTANDING VOLTAGE: 250V AC PER MINUTE.
3.5 OPERATING TEMPERATURE: -40℃ ~ +105℃.
3.6 OPERATING: 100 CYCLES MIN.
3.7 INSERTION FORCE: 90g MAX. Per PIN Pair.
3.8 WITHDRAWAL FORCE: 10g MIN. Per PIN Pair.
3.9 CONTACT RETENTION FORCE: 250g MIN. PER CONTACT
3.10 STORAGE TEMPERATURE: -10℃ ~ +40℃.

Flatness: <80Pins The "M" Is 0.10mm MAX
B3 ≥80Pins The "M" Is 0.15mm MAX

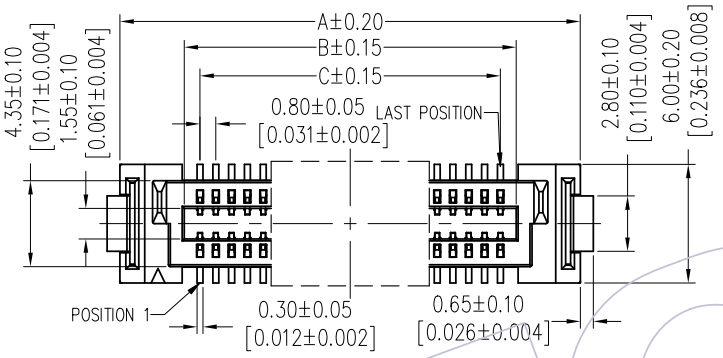

Recommended P.C.B Layout(Top Side)
(PCB BOARD TOLERANCE±0.05)

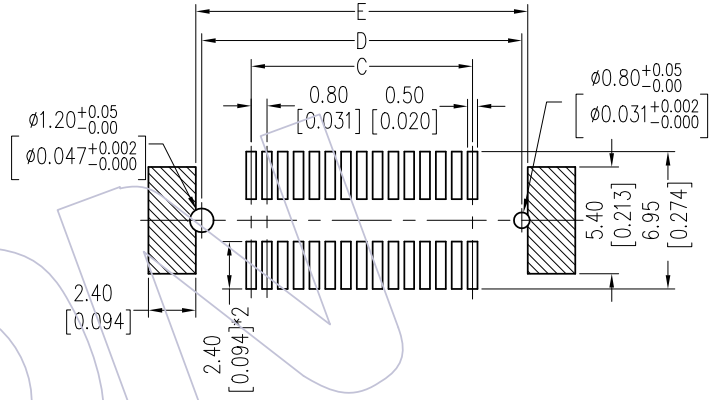

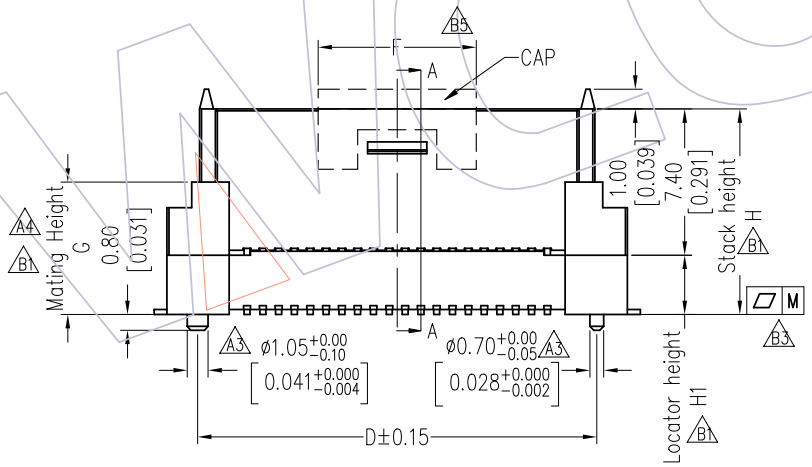

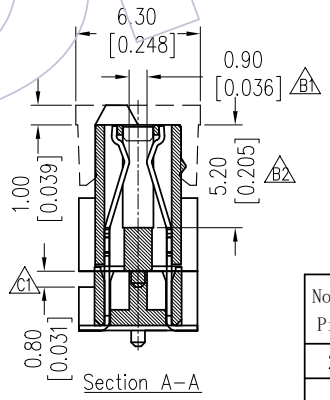

C0

CAP PART NO.	Dimension F	Applicable Pins
CAP3614-G202	8.00	20~30
CAP3614-G203	16.00	40~50
CAP3614-G204	24.00	60~70
CAP3614-G205	32.00	80~90
CAP3614-G206	40.00	100~110~120

Ordering Information

3614- S XXX - XXX XX R 01

No.of Pins | High "H" | Contact Plating | Packing
S1=3u"Gold/Tin | R=Tape&Reel+CAP
S2=5u"Gold/Tin

Dim H	Dim G +0.00 -0.40	Dim H1
7.40	4.00	---
10.40	7.00	3.00
11.40	8.00	4.00
12.40	9.00	5.00
13.40	10.00	6.00

B4

No. of Pins	Dimension A	B	C	D	E
20	15.30	8.80	7.20	12.20	12.80
30	19.30	12.80	11.20	16.20	16.80
40	23.30	16.80	15.20	20.20	20.80
50	27.30	20.80	19.20	24.20	24.80
60	31.30	24.80	23.20	28.20	28.80
80	39.30	32.80	31.20	36.20	36.80
100	47.30	40.80	39.20	44.20	44.80
120	55.30	48.80	47.20	52.20	52.80
160	71.30	64.80	63.20	68.20	68.80

REV	DATE	MODIFICATION DESCRIPTION	CHANGE
C1	2018/05/24	Modify	C1
C0	2017/02/14	ADD CAP	C0
B5	2016/10/12	更改CAP的长度	B5
A0	2010/03/09	NEW	——

OPERATION	
X.X	±0.40
X.XX	±0.25
X.XXX	±0.15
Angle	± 3°
DIM	TOL

DRAW	Ding	DATE	2018/05/24
CHECK		DATE	
APPROVE		DATE	

SCALE	FIT
UNIT	mm / inch
SIZE	A4
SHEET	1/1
PROJ.	

PART NO. 3614-SXXX-XXXXXR01

TITLE: 0.80mm BTB FEMALE "D" TYPE 180° SMT

Customer NO.

WCON
Http: www.wcon.com
WCON-Dongguan
Tel: +86 769 85358920
Fax: +86 769 85358915
E-mail: sales@wcon.com
WCON-Kunshan
Tel: +86 512 57468408
Fax: +86 512 57468468
E-mail: salesks@wcon.com