R76, Double Metallized Polypropylene Film, Radial, DC and Pulse Applications (Automotive Grade)

Electronic Components KEMET CHARGED.

Overview

The R76 Series is constructed of polypropylene film and double metallized polyester film as electrodes with radial leads of tinned wire. The radial leads are electrically welded to the metal layer on the ends of the capacitor winding. The capacitor is encapsulated in a self-extinguishing solvent resistant plastic case with thermosetting resin material meeting UL 94 V–0 requirements. Two different winding constructions are used depending on voltage parameters. Please see the Performance Characteristics for more information.

Automotive grade devices (up to lead spacing 22.5 mm) meet the demanding Automotive Electronics Council's AEC–Q200 qualification requirements.

Applications

Typical applications include resonant circuit, high frequency high current, snubber and silicon-controlled rectifier (SCR and IGBT) and SiC (e.g. MOSFET) commutation circuits as well as applications with high voltage and high current.

Not suitable for across-the-line application (see Suppressor Capacitors).

Benefits

- Voltage range: 250 – 2,000 VDC
- Capacitance range: 100 pF – 15 µF
- Lead Spacing: 7.5 mm – 37.5 mm
- Capacitance tolerance: ±2.5%, ±5%, ±10%
- Climatic category: 55/110/56 IEC 60068–1
- Operating temperature range of −55°C to +110°C
- RoHS compliance and lead-free terminations
- Tape & Reel packaging in accordance with IEC 60286–2
- Self-healing
- Automotive (AEC–Q200) grades available up to lead spacing 22.5 mm

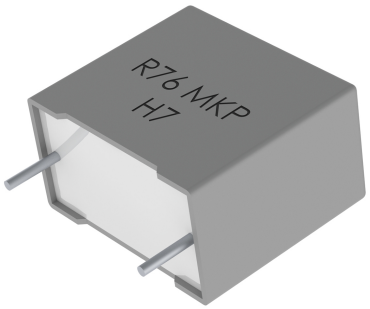

Click image above for interactive 3D content

Open PDF in Adobe Reader for full functionality

Part Number System

R76	I	D	1680	SE	30		K
Series	Rated Voltage (VDC)	Lead Spacing (mm)	Capacitance Code (pF)	Packaging	Internal Use		Capacitance Tolerance
Double Metallized Polypropylene	I = 250 M = 400 P = 630 Q = 1,000 T = 1,600 U = 2,000	D = 7.5 F = 10 I = 15 N = 22.5 R = 27.5 W = 37.5	The last three digits represent significant figures. The first digit specifies the total number of zeros to be added.	See Ordering Options Table	00 10 20 30 40	50 60 70 80 L0	H = ±2.5% (*) J = ±5% K = ±10% (*) = for C ≥ 1,000 pF

© KEMET Electronics Corporation • KEMET Tower • One East Broward Boulevard
Fort Lauderdale, FL 33301 USA • 954-766-2800 • www.kemet.com

Ordering Options Table

Lead Spacing Nominal (mm)	Type of Leads and Packaging	Lead Length (mm)	Lead and Packaging Code
7.5	**Standard Lead and Packaging Options**		
	Bulk (Bag) – Short Leads	4 +2/−0	SE
	Ammo Pack	H_0 = 18.5±0.5	DQ
	Other Lead and Packaging Options		
	Tape & Reel (Standard Reel Ø 355 mm)	H_0 = 18.5±0.5	CK
	Bulk (Bag) – Short Leads	2.7 +0.5/−0	JA
	Bulk (Bag) – Short Leads	3.5 +0.5/−0	JB
	Bulk (Bag) – Short Leads	4.0 +0.5/−0	JE
	Bulk (Bag) – Short Leads	3.2 +0.3/−0.2	JH
	Bulk (Bag) – Long Leads	18±1	JM
	Bulk (Bag) – Long Leads	17 +1/−2	Z3
10 15 22.5	**Standard Lead and Packaging Options**		
	Bulk (Bag) – Short Leads	4 +2/−0	SE
	Ammo Pack	H_0 = 18.5±0.5	DQ
	Other Lead and Packaging Options		
	Tape & Reel (Standard Reel Ø 355 mm)	H_0 = 18.5±0.5	GY
	Tape & Reel (Large Reel Ø 500 mm)	H_0 = 18.5±0.5	CK
	Bulk (Bag) – Short Leads	2.7 +0.5/−0	JA
	Bulk (Bag) – Short Leads	3.5 +0.5/−0	JB
	Bulk (Bag) – Short Leads	10±1	JC
	Bulk (Bag) – Short Leads	4.0 +0.5/−0	JE
	Bulk (Bag) – Short Leads	3.2 +0.3/−0.2	JH
	Bulk (Bag) – Long Leads	18±1	JM
	Bulk (Bag) – Long Leads	30 +5/−0	40
	Bulk (Bag) – Long Leads	25 +2/−1	50
27.5	**Standard Lead and Packaging Options**		
	Bulk (Tray) – Short Leads	4 +2/−0	SE
	Other Lead and Packaging Options		
	Tape & Reel (Standard Reel Ø 355 mm)	H_0 = 18.5±0.5	GY
	Tape & Reel (Large Reel Ø 500 mm)	H_0 = 18.5±0.5	CK
	Bulk (Tray) – Short Leads	3.5 +0.5/−0	JB
	Bulk (Tray) – Short Leads	4.0 +0.5/−0	JE
	Bulk (Tray) – Short Leads	3.2 +0.3/−0.2	JH
	Bulk (Tray) – Long Leads	30 +5/−0	40
	Bulk (Tray) – Long Leads	25 +2/−1	50

Ordering Options Table cont.

Lead Spacing Nominal (mm)	Type of Leads and Packaging	Lead Length (mm)	Lead and Packaging Code
37.5	**Standard Lead and Packaging Options**		
	Bulk (Tray) – Short Leads	4 +2/−0	SE
	Other Lead and Packaging Options		
	Bulk (Tray) – Short Leads	3.5 +0.5/−0	JB
	Bulk (Tray) – Short Leads	4.0 +0.5/−0	JE
	Bulk (Tray) – Short Leads	3.2 +0.3/−0.2	JH
	Bulk (Tray) – Long Leads	30 +5/−0	40
	Bulk (Tray) – Long Leads	25 +2/−1	50

Dimensions – Millimeters

Loose

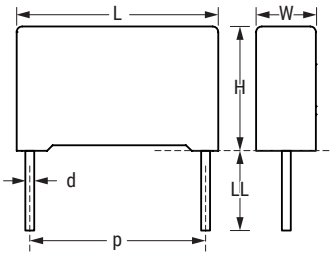

Taped

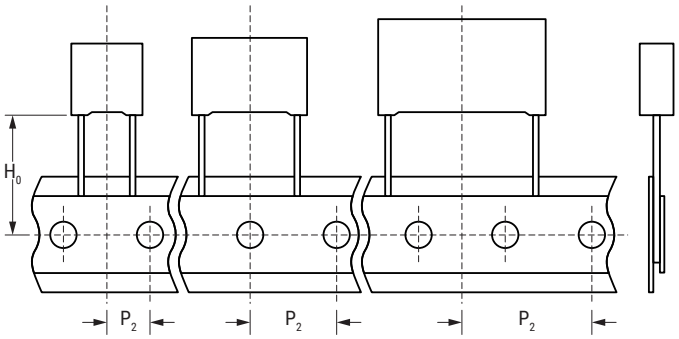

p		W		H		L		d	
Nominal	Tolerance	Nominal	Tolerance	Nominal	Tolerance	Nominal	Tolerance	Nominal	Tolerance
7.5	±0.4	3.0	+0.1	8.0	+0.1	10.0	+0.2	0.5	±0.05
7.5	±0.4	4.0	+0.1	9.0	+0.1	10.0	+0.2	0.6	±0.05
7.5	±0.4	5.0	+0.1	10.5	+0.1	10.0	+0.2	0.6	±0.05
7.5	±0.4	6.0	+0.1	12.0	+0.1	10.5	+0.2	0.6	±0.05
10.0	±0.4	4.0	+0.2	9.0	+0.1	13.0	+0.2	0.6	±0.05
10.0	±0.4	5.0	+0.2	11.0	+0.1	13.0	+0.2	0.6	±0.05
10.0	±0.4	6.0	+0.2	12.0	+0.1	13.0	+0.2	0.6	±0.05
15.0	±0.4	4.0	+0.2	10.0	+0.1	18.0	+0.3	0.8	±0.05
15.0	±0.4	5.0	+0.2	11.0	+0.1	18.0	+0.3	0.8	±0.05
15.0	±0.4	6.0	+0.2	12.0	+0.1	18.0	+0.3	0.8	±0.05
15.0	±0.4	7.5	+0.2	13.5	+0.1	18.0	+0.5	0.8	±0.05
15.0	±0.4	8.5	+0.2	14.5	+0.1	18.0	+0.5	0.8	±0.05
15.0	±0.4	9.0	+0.2	12.5	+0.1	18.0	+0.5	0.8	±0.05
15.0	±0.4	10.0	+0.2	16.0	+0.1	18.0	+0.5	0.8	±0.05
Note: See Ordering Options Table for lead length (LL/Ho) options.									

Dimensions – Millimeters cont.

Loose

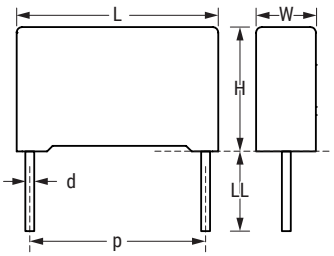

Taped

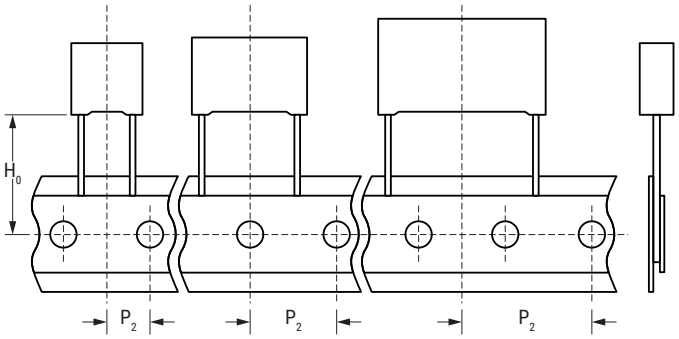

p		W		H		L		d	
Nominal	Tolerance	Nominal	Tolerance	Nominal	Tolerance	Nominal	Tolerance	Nominal	Tolerance
15.0	±0.4	11.0	+0.2	19.0	+0.1	18.0	+0.5	0.8	±0.05
15.0	±0.4	13.0	+0.2	12.0	+0.1	18.0	+0.5	0.8	±0.05
22.5	±0.4	6.0	+0.2	15.0	+0.1	26.5	+0.3	0.8	±0.05
22.5	±0.4	7.0	+0.2	16.0	+0.1	26.5	+0.3	0.8	±0.05
22.5	±0.4	8.5	+0.2	17.0	+0.1	26.5	+0.3	0.8	±0.05
22.5	±0.4	10.0	+0.2	18.5	+0.1	26.5	+0.3	0.8	±0.05
22.5	±0.4	11.0	+0.2	20.0	+0.1	26.5	+0.3	0.8	±0.05
22.5	±0.4	13.0	+0.2	22.0	+0.1	26.5	+0.3	0.8	±0.05
27.5	±0.4	9.0	+0.2	17.0	+0.1	32.0	+0.3	0.8	±0.05
27.5	±0.4	11.0	+0.2	20.0	+0.1	32.0	+0.3	0.8	±0.05
27.5	±0.4	13.0	+0.2	22.0	+0.1	32.0	+0.3	0.8	±0.05
27.5	±0.4	13.0	+0.2	25.0	+0.1	32.0	+0.3	0.8	±0.05
27.5	±0.4	14.0	+0.2	28.0	+0.1	32.0	+0.3	0.8	±0.05
27.5	±0.4	18.0	+0.2	33.0	+0.1	32.0	+0.3	0.8	±0.05
27.5	±0.4	22.0	+0.2	37.0	+0.1	32.0	+0.3	0.8	±0.05
27.5	±0.4	24.0	+0.2	15.0	+0.1	32.0	+0.3	0.8	±0.05
37.5	±0.4	11.0	+0.3	22.0	+0.1	41.5	+0.3	1.0	±0.05
37.5	±0.4	13.0	+0.3	24.0	+0.1	41.5	+0.3	1.0	±0.05
37.5	±0.4	16.0	+0.3	28.5	+0.1	41.5	+0.3	1.0	±0.05
37.5	±0.4	19.0	+0.3	32.0	+0.1	41.5	+0.3	1.0	±0.05
37.5	±0.4	20.0	+0.3	40.0	+0.1	41.5	+0.3	1.0	±0.05
37.5	±0.4	24.0	+0.3	44.0	+0.1	41.5	+0.3	1.0	±0.05
37.5	±0.4	24.0	+0.3	15.0	+0.1	41.5	+0.3	1.0	±0.05
37.5	±0.4	24.0	+0.3	19.0	+0.1	41.5	+0.3	1.0	±0.05
37.5	±0.4	30.0	+0.3	45.0	+0.1	41.5	+0.3	1.0	±0.05

Note: See Ordering Options Table for lead length (LL/Ho) options.

Performance Characteristics

Dielectric	Polypropylene film							
Plates	Double sided metallized polyester film							
Winding	Non-inductive type							
Leads	Tinned wire							
Protection	Plastic case, thermosetting resin filled. Box material is solvent resistant and flame retardant according to UL94.							
Related Documents	IEC 60384–16							
Sections	1			2				
Rated Voltage V_R	250 VDC 180 VAC	400 VDC 250 VAC	630 VDC 250 VAC	630 VDC 400 VAC	1,000 VDC 400 VAC	1,000 VDC 600 VAC	1,600 VDC 650 VAC	2,000 VDC 700 VAC
Capacitance Range (µF)	0.0068– 12	0.0027 – 8.2	0.00068 – 0.012	0.0039 – 3.9	0.00022 – 0.0033	0.00047 – 2.2	0.0033 – 1.2	0.0001 – 0.56
Capacitance Values	E12 series (IEC 60063) measured at 1 kHz and +20±1°C							
Capacitance Tolerance	±2.5%, ±5%, ±10%							
Operating Temperature Range	−55°C to +110°C							
Rated Temperature T_R	+85°C for V_R (DC and AC)							
Voltage Derating	The following decreasing factor has to be applied on the rated voltage: +85°C to +110°C: 1.25% per °C for V_R (DC and AC)							
Climatic Category	55/110/56 IEC 60068–1							
Storage Conditions	Storage time: ≤ 24 months from the date marked on the label package							
	Average relative humidity per year ≤ 70%							
	RH ≤ 85% for 30 days randomly distributed throughout the year							
	Dew is absent							
	Temperature: −40 to 80°C (see "Maximum Humidity in Storage Conditions" graph below)							
Test Voltage	1.6 x V_R VDC for 2 seconds (between terminations) at +25°C ±5°C							
Capacitance Drift	Maximum 0.5% after a 2 year storage period at a temperature of +10°C to +40°C and a relative humidity of 40% to 60%							
Maximum Pulse Steepness	dV/dt according to Table 1. For working voltages lower than rated voltage ($V < V_R$), the specified dV/dt can be multiplied by the factor V_R/V.							
Reliability (Reference MIL–HDBK–217)	Operational life > 200,000 hours at 85°C							
	Failure rate ≤ 1 FIT, T = +40°C, V = 0.5 x V_R							
	Failure criteria: open or short circuit, cap. change > 10%, DF 2 times the catalog limits, IR < 0.005 x initial limit							
Temperature Coefficient	−(200±100) ppm/°C at 1 kHz							
Self-Inductance (Lead Length ~ 2 mm)	Lead Spacing (mm)	7.5	10	15	22.5	27.5	37.5	
	L (nH) ≈	8	9	10	16	18	20	
	Max 1 nH per 1 mm lead and capacitor length							

Performance Characteristics cont.

Dissipation Factor tanδ	Measured at 25°C ±5°C			
	Frequency	C ≤ 0.1 µF	0.1 µF < C ≤ 1.0 µF	C > 1µF
	1 kHz	≤ 0.03%	≤ 0.03%	≤ 0.04%
	10 kHz	≤ 0.04%	≤ 0.06%	–
	100 kHz	≤ 0.10%	–	–

Insulation Resistance	Measured at +25°C, 100 VDC 60 seconds	
	Minimum Values Between Terminals	
	C ≤ 0.33 µF	C > 0.33 µF
	≥ 100,000 MΩ (≥ 500,000 MΩ)*	≥ 30,000 MΩ • µF (≥ 150,000 MΩ • µF)*

** Typical value*

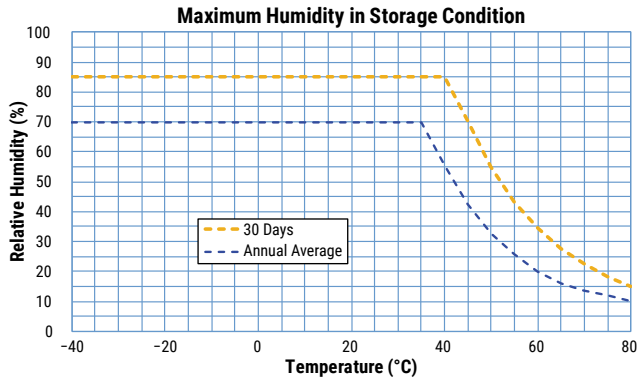

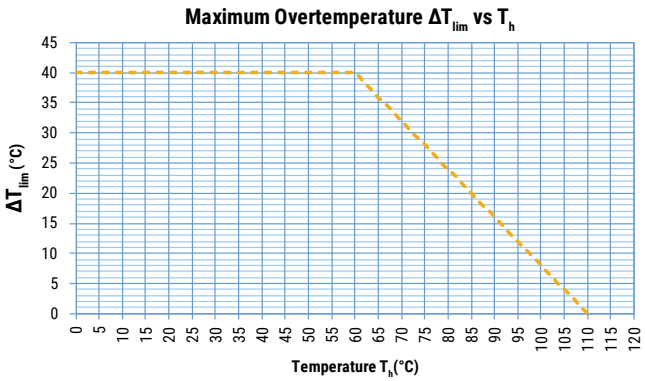

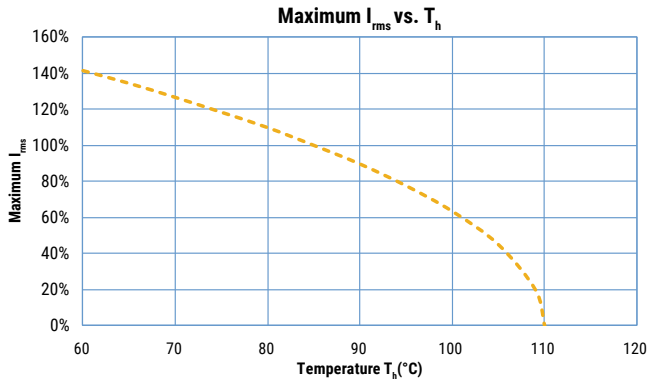

T_h is the maximum ambient temperature surrounding the capacitor or hottest contact point (e.g. tracks), whichever is higher, in the worst operation conditions in °C.

Qualification

Automotive Grade products meet or exceed the requirements outlined by the Automotive Electronics Council. Details regarding test methods and conditions are referenced in document AEC–Q200, Stress Test Qualification for Passive Components. For additional information regarding the Automotive Electronics Council and AEC–Q200, please visit their website at www.aecouncil.com.

Maximum Voltage (V_{rms}) Versus Frequency (Sinusoidal Waveform/Th ≤ 85°C)

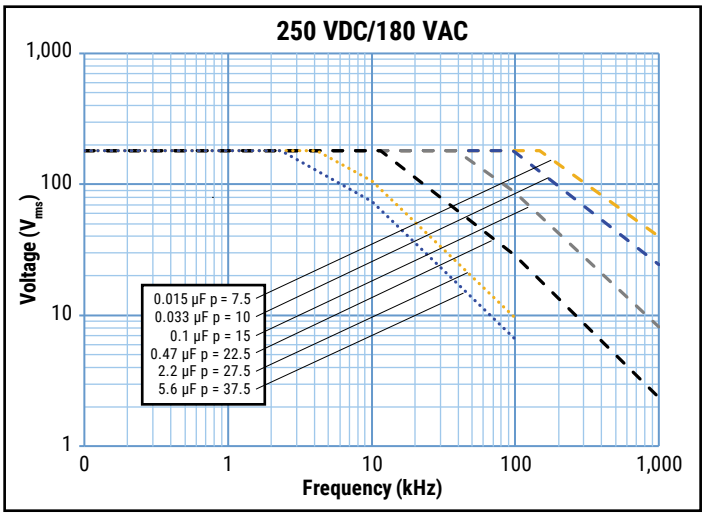

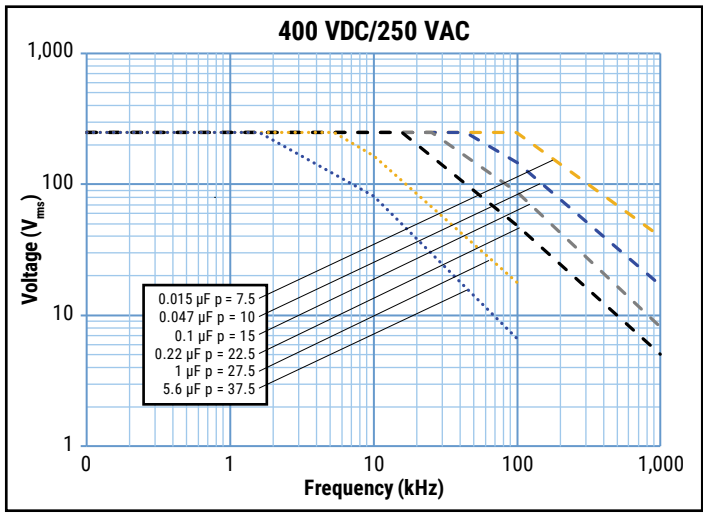

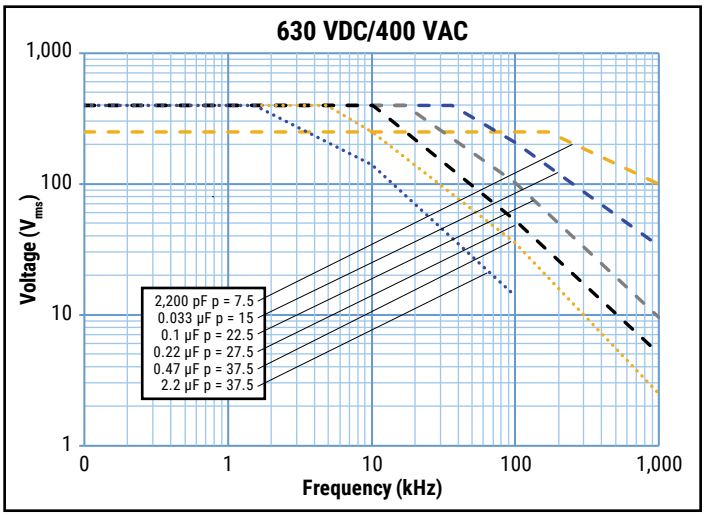

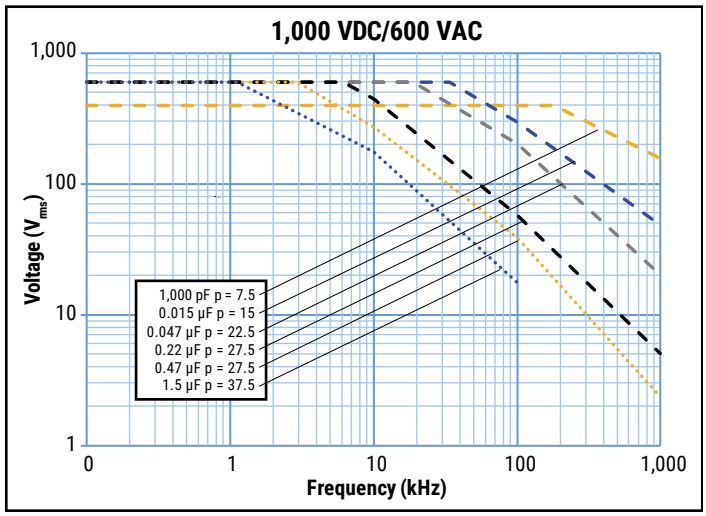

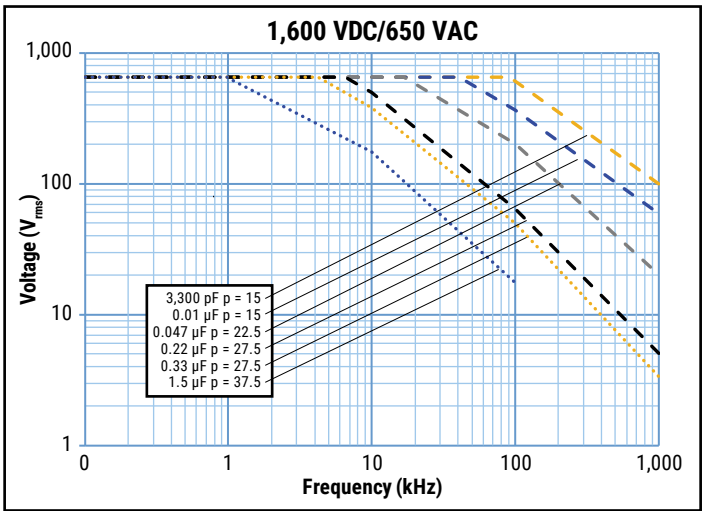

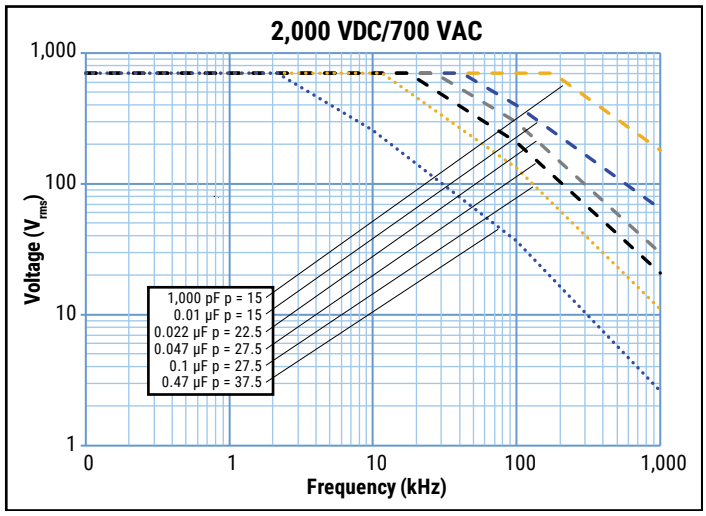

Maximum Current (I_{rms}) Versus Frequency (Sinusoidal Waveform/Th ≤ 85°C)

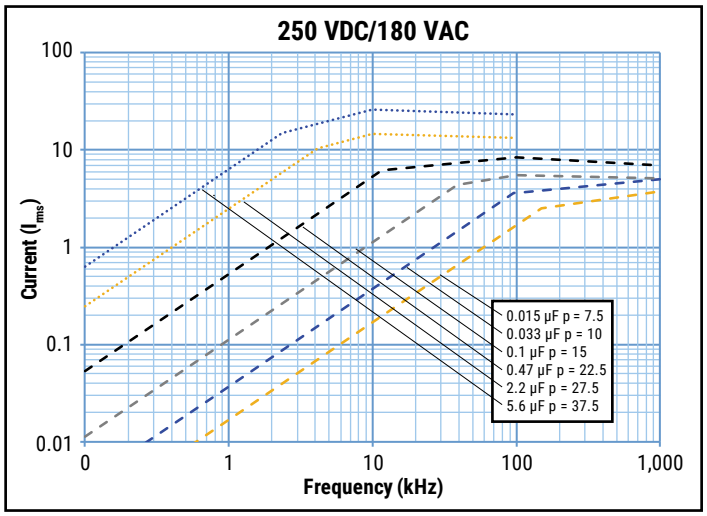

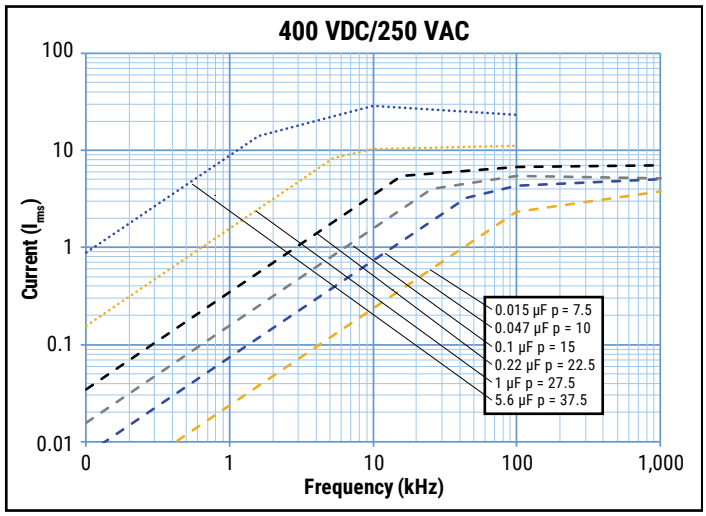

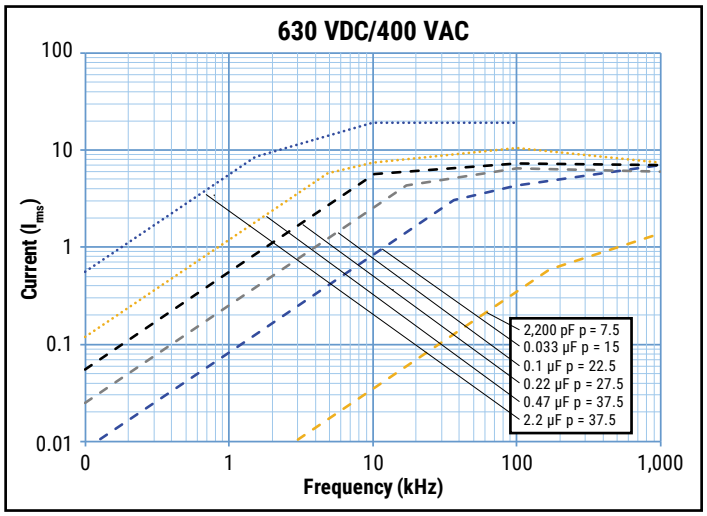

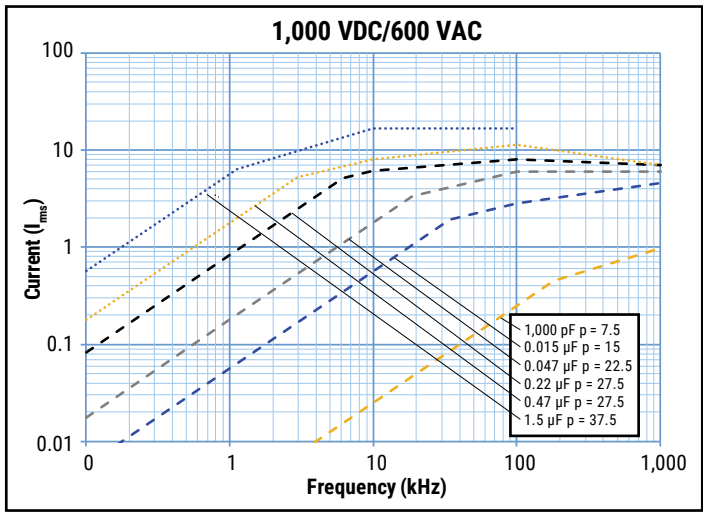

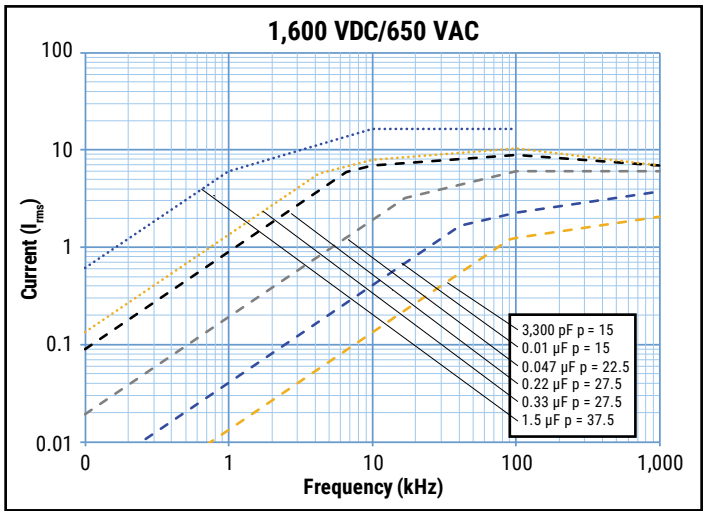

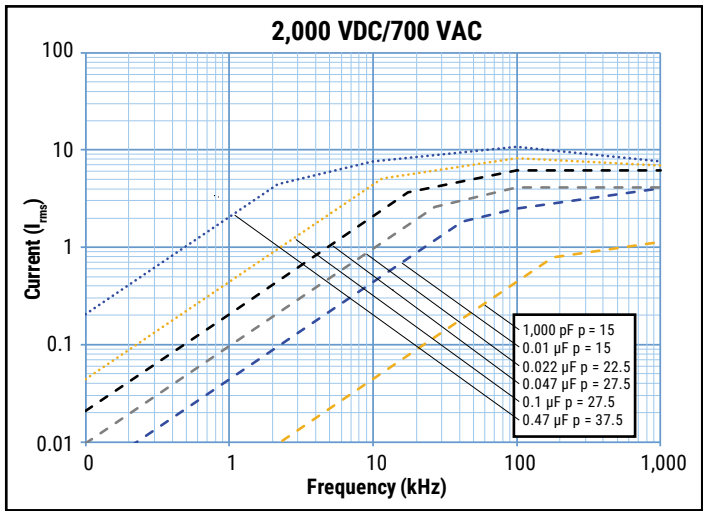

Environmental Test Data

Damp Heat, Steady State Test	Test Conditions:		Performances
	Temperature: Relative humidity (RH): Test duration:	+40°C ±2°C 93% ±2% 56 days	|Δ C/C| ≤ 2%, Δ tanδ ≤ 0.001 at 1 kHz IR after test ≥ 50% of initial limit
Endurance Test	**Test Conditions**		**Performances**
	Temperature: Voltage applied: Test duration:	+85°C ±2°C 1.25 x V_R (DC) 2,000 hours	|Δ C/C| ≤ 2%, Δ tanδ ≤ 0.001 at 10 kHz for C ≤ 1μF Δ tanδ ≤ 0.001 at 1 kHz for C > 1μF IR after test ≥ 50% of initial limit
Resistance to Soldering Heat Test	**Test Conditions**		**Performances**
	Solder bath temperature: Dipping time (with heat screen):	260°C ±5°C 10 seconds ±1 second	|Δ C/C| ≤ 1%, Δ tanδ ≤ 0.001 at 10 kHz for C ≤ 1μF Δ tanδ ≤ 0.001 at 1 kHz for C > 1μF IR after test ≥ initial limit

Environmental Compliance

All KEMET pulse capacitors are RoHS compliant.

Table 1 – Ratings & Part Number Reference

VDC	VAC	Cap Value (µF)	Dimensions in mm			Lead Spacing (p)	dV/dt (V/µs)	Max K_0 (V^2/µs)	I_{pkr}	ESL	ESR	$I_{rms\ max}$ (*)	Rth	KEMET Internal Part Number	Customer Part Number
										Lead Length 2x 4 mm	at 100 kHz	at 100 kHz, 85°C			
			W	H	L				A_{pk}	nH	mΩ	A_{rms}	(°C/W)		
250	180	0.0068	3.0	8.0	10.0	7.5	1,100	550,000	7	8	94	0.77	98	76ID1680(1)30(2)	R76ID1680(1)30(2)
250	180	0.0082	3.0	8.0	10.0	7.5	1,100	550,000	9	8	78	0.93	98	76ID1820(1)30(2)	R76ID1820(1)30(2)
250	180	0.010	3.0	8.0	10.0	7.5	1,100	550,000	11	8	64	1.13	98	76ID2100(1)30(2)	R76ID2100(1)30(2)
250	180	0.012	4.0	9.0	10.0	7.5	1,100	550,000	13	8	53	1.36	88	76ID2120(1)40(2)	R76ID2120(1)40(2)
250	180	0.015	4.0	9.0	10.0	7.5	1,100	550,000	17	8	42	1.70	88	76ID2150(1)40(2)	R76ID2150(1)40(2)
250	180	0.018	4.0	9.0	10.0	7.5	1,100	550,000	20	8	35	2.04	88	76ID2180(1)40(2)	R76ID2180(1)40(2)
250	180	0.022	4.0	9.0	10.0	7.5	1,100	550,000	24	8	29	2.49	88	76ID2220(1)40(2)	R76ID2220(1)40(2)
250	180	0.027	5.0	10.5	10.0	7.5	1,100	550,000	30	8	24	3.05	78	76ID2270(1)40(2)	R76ID2270(1)40(2)
250	180	0.033	5.0	10.5	10.0	7.5	1,100	550,000	36	8	19	3.64	78	76ID2330(1)40(2)	R76ID2330(1)40(2)
250	180	0.039	6.0	12.0	10.5	7.5	1,100	550,000	43	8	16	4.20	69	76ID2390(1)30(2)	R76ID2390(1)30(2)
250	180	0.047	6.0	12.0	10.5	7.5	1,100	550,000	52	8	14	4.61	69	76ID2470(1)30(2)	R76ID2470(1)30(2)
250	180	0.027	4.0	9.0	13.0	10.0	1,000	500,000	27	9	24	3.05	79	76IF2270(1)30(2)	R76IF2270(1)30(2)
250	180	0.033	4.0	9.0	13.0	10.0	1,000	500,000	33	9	19	3.63	79	76IF2330(1)30(2)	R76IF2330(1)30(2)
250	180	0.039	4.0	9.0	13.0	10.0	1,000	500,000	39	9	16	3.95	79	76IF2390(1)30(2)	R76IF2390(1)30(2)
250	180	0.047	5.0	11.0	13.0	10.0	1,000	500,000	47	9	14	4.62	69	76IF2470(1)30(2)	R76IF2470(1)30(2)
250	180	0.056	5.0	11.0	13.0	10.0	1,000	500,000	56	9	23	3.57	69	76IF2560(1)30(2)	R76IF2560(1)30(2)
250	180	0.068	6.0	12.0	13.0	10.0	1,000	500,000	68	9	19	4.09	64	76IF2680(1)30(2)	R76IF2680(1)30(2)
250	180	0.082	6.0	12.0	13.0	10.0	1,000	500,000	82	9	16	4.49	64	76IF2820(1)30(2)	R76IF2820(1)30(2)
250	180	0.068	5.0	11.0	18.0	15.0	550	275,000	37	10	19	4.2	60	76II2680(1)30(2)	R76II2680(1)30(2)
250	180	0.082	5.0	11.0	18.0	15.0	550	275,000	45	10	16	4.6	60	76II2820(1)30(2)	R76II2820(1)30(2)
250	180	0.10	5.0	11.0	18.0	15.0	550	275,000	55	10	13	5.1	60	76II3100(1)30(2)	R76II3100(1)30(2)
250	180	0.12	6.0	12.0	18.0	15.0	550	275,000	66	10	13	5.2	56	76II3120(1)30(2)	R76II3120(1)30(2)
250	180	0.15	6.0	12.0	18.0	15.0	550	275,000	83	10	11	5.8	56	76II3150(1)30(2)	R76II3150(1)30(2)
250	180	0.18	7.5	13.5	18.0	15.0	550	275,000	99	10	9	6.7	51	76II3180(1)30(2)	R76II3180(1)30(2)
250	180	0.18	9.0	12.5	18.0	15.0	550	275,000	99	10	9	6.8	50	76II3180(1)70(2)	R76II3180(1)70(2)
250	180	0.22	7.5	13.5	18.0	15.0	550	275,000	121	10	7	7.4	51	76II3220(1)30(2)	R76II3220(1)30(2)
250	180	0.22	9.0	12.5	18.0	15.0	550	275,000	121	10	7	7.5	50	76II3220(1)70(2)	R76II3220(1)70(2)
250	180	0.27	8.5	14.5	18.0	15.0	550	275,000	149	10	6	8.4	48	76II3270(1)30(2)	R76II3270(1)30(2)
250	180	0.27	9.0	12.5	18.0	15.0	550	275,000	149	10	6	8.3	50	76II3270(1)70(2)	R76II3270(1)70(2)
250	180	0.33	10.0	16.0	18.0	15.0	550	275,000	182	10	5	9.7	44	76II3330(1)30(2)	R76II3330(1)30(2)
250	180	0.33	13.0	12.0	18.0	15.0	550	275,000	182	10	5	9.6	45	76II3330(1)70(2)	R76II3330(1)70(2)
250	180	0.39	10.0	16.0	18.0	15.0	550	275,000	215	10	4	10.5	44	76II3390(1)30(2)	R76II3390(1)30(2)
250	180	0.47	11.0	19.0	18.0	15.0	550	275,000	259	10	3	12.1	40	76II3470(1)30(2)	R76II3470(1)30(2)
250	180	0.22	6.0	15.0	26.5	22.5	300	150,000	55	16	7	8.0	43	76IN3220(1)00(2)	R76IN3220(1)00(2)
250	180	0.27	6.0	15.0	26.5	22.5	300	150,000	68	16	6	8.8	43	76IN3270(1)30(2)	R76IN3270(1)30(2)
250	180	0.33	6.0	15.0	26.5	22.5	300	150,000	83	16	5	9.8	43	76IN3330(1)30(2)	R76IN3330(1)30(2)
250	180	0.39	7.0	16.0	26.5	22.5	300	150,000	98	16	4	10.9	41	76IN3390(1)30(2)	R76IN3390(1)30(2)
250	180	0.47	7.0	16.0	26.5	22.5	300	150,000	118	16	3	12.0	41	76IN3470(1)30(2)	R76IN3470(1)30(2)
250	180	0.56	8.5	17.0	26.5	22.5	300	150,000	140	16	3	13.5	38	76IN3560(1)30(2)	R76IN3560(1)30(2)
250	180	0.68	10.0	18.5	26.5	22.5	300	150,000	170	16	2.3	15.5	36	76IN3680(1)30(2)	R76IN3680(1)30(2)
250	180	0.82	10.0	18.5	26.5	22.5	300	150,000	205	16	1.9	17.0	36	76IN3820(1)30(2)	R76IN3820(1)30(2)
250	180	1.0	11.0	20.0	26.5	22.5	300	150,000	250	16	7.2	9.1	34	76IN4100(1)30(2)	R76IN4100(1)30(2)
250	180	1.2	13.0	22.0	26.5	22.5	300	150,000	300	16	15.9	6.3	31	76IN4120(1)30(2)	R76IN4120(1)30(2)
250	180	0.82	9.0	17.0	32.0	27.5	200	100,000	164	18	9	8.1	35	76IR3820(1)30(2)	R76IR3820(1)30(2)
250	180	1.0	11.0	20.0	32.0	27.5	200	100,000	200	18	7	9.4	31	76IR4100(1)30(2)	R76IR4100(1)30(2)
250	180	1.0	24.0	15.0	32.0	27.5	200	100,000	200	18	7	10.1	27	76IR4100(1)L0(2)	R76IR4100(1)L0(2)
250	180	1.2	11.0	20.0	32.0	27.5	200	100,000	240	18	15.9	6.3	31	76IR4120(1)40(2)	R76IR4120(1)40(2)
250	180	1.2	24.0	15.0	32.0	27.5	200	100,000	240	18	16	6.8	27	76IR4120(1)L0(2)	R76IR4120(1)L0(2)
250	180	1.5	13.0	22.0	32.0	27.5	200	100,000	300	18	12.7	7.3	29	76IR4150(1)30(2)	R76IR4150(1)30(2)
250	180	1.5	24.0	15.0	32.0	27.5	200	100,000	300	18	13	7.6	27	76IR4150(1)L0(2)	R76IR4150(1)L0(2)
250	180	1.8	13.0	25.0	32.0	27.5	200	100,000	360	18	10.6	8.2	28	76IR4180(1)20(2)	R76IR4180(1)20(2)
VDC	VAC	Cap Value	W	H	L	Lead Spacing (p)	dV/dt (V/µs)	Max K_0 (V^2/µs)	A_{pk}	Lead Length 2x 4 mm	at 100 kHz	at 100 kHz, 85°C	(°C/W)	KEMET Internal Part Number	Customer Part Number
									I_{pkr}	ESL	ESR	$I_{rms\ max}$ (*)	R_{th}		

(1) Insert lead and packaging code. See Ordering Options Table for available options.
(2) H = 2.5% (only for C ≥ 1,000 pF), J = 5%, K = 10%
(*) I_{rms} value that leads to a ΔT of ≈ 20°C in the hot spot > $T_{HS} = T_{AMB} + \Delta T$ = 85°C + 20°C = 105°C

Table 1 – Ratings & Part Number Reference cont.

VDC	VAC	Cap Value (µF)	Dimensions in mm			Lead Spacing (p)	dV/dt (V/µs)	Max K_0 (V^2/µs)	I_{pkr}	ESL	ESR	$I_{rms\ max}$ (*)	Rth	KEMET Internal Part Number	Customer Part Number
										Lead Length 2x 4 mm	at 100 kHz	at 100 kHz, 85°C			
			W	H	L				A_{pk}	nH	mΩ	A_{rms}	(°C/W)		
250	180	1.8	24.0	15.0	32.0	27.5	200	100,000	360	18	11	8.3	27	76IR4180(1)L0(2)	R76IR4180(1)L0(2)
250	180	2.2	14.0	28.0	32.0	27.5	200	100,000	440	18	8.7	9.4	26	76IR4220(1)40(2)	R76IR4220(1)40(2)
250	180	2.7	18.0	33.0	32.0	27.5	200	100,000	540	18	7.1	11.1	23	76IR4270(1)30(2)	R76IR4270(1)30(2)
250	180	3.3	18.0	33.0	32.0	27.5	200	100,000	660	18	5.8	12.3	23	76IR4330(1)30(2)	R76IR4330(1)30(2)
250	180	3.9	18.0	33.0	32.0	27.5	200	100,000	780	18	4.9	13.3	23	76IR4390(1)30(2)	R76IR4390(1)30(2)
250	180	4.7	22.0	37.0	32.0	27.5	200	100,000	940	18	4.1	15.4	21	76IR4470(1)30(2)	R76IR4470(1)30(2)
250	180	5.6	22.0	37.0	32.0	27.5	200	100,000	1,120	18	3.4	16.8	21	76IR4560(1)40(2)	R76IR4560(1)40(2)
250	180	1.2	11.0	22.0	41.5	37.5	100	50,000	120	20	15.9	6.8	27	76IW4120(1)30(2)	R76IW4120(1)30(2)
250	180	1.5	11.0	22.0	41.5	37.5	100	50,000	150	20	12.7	7.6	27	76IW4150(1)30(2)	R76IW4150(1)30(2)
250	180	1.5	24.0	15.0	41.5	37.5	100	50,000	150	20	12.7	8.0	24	76IW4150(1)L0(2)	R76IW4150(1)L0(2)
250	180	1.8	11.0	22.0	41.5	37.5	100	50,000	180	20	10.6	8.3	27	76IW4180(1)30(2)	R76IW4180(1)30(2)
250	180	1.8	24.0	15.0	41.5	37.5	100	50,000	180	20	10.6	8.8	24	76IW4180(1)L0(2)	R76IW4180(1)L0(2)
250	180	2.2	13.0	24.0	41.5	37.5	100	50,000	220	20	8.7	9.6	25	76IW4220(1)30(2)	R76IW4220(1)30(2)
250	180	2.2	24.0	15.0	41.5	37.5	100	50,000	220	20	8.7	9.7	24	76IW4220(1)L0(2)	R76IW4220(1)L0(2)
250	180	2.7	16.0	28.5	41.5	37.5	100	50,000	270	20	7.1	11.2	23	76IW4270(1)20(2)	R76IW4270(1)20(2)
250	180	2.7	24.0	19.0	41.5	37.5	100	50,000	270	20	7.1	11.1	23	76IW4270(1)L0(2)	R76IW4270(1)L0(2)
250	180	3.3	16.0	28.5	41.5	37.5	100	50,000	330	20	5.8	12.4	23	76IW4330(1)30(2)	R76IW4330(1)30(2)
250	180	3.3	24.0	19.0	41.5	37.5	100	50,000	330	20	5.8	12.3	23	76IW4330(1)L0(2)	R76IW4330(1)L0(2)
250	180	3.9	16.0	28.5	41.5	37.5	100	50,000	390	20	4.9	13.5	23	76IW4390(1)30(2)	R76IW4390(1)30(2)
250	180	4.7	19.0	32.0	41.5	37.5	100	50,000	470	20	4.1	15.4	21	76IW4470(1)30(2)	R76IW4470(1)30(2)
250	180	5.6	20.0	40.0	41.5	37.5	100	50,000	560	20	3.4	17.7	19	76IW4560(1)20(2)	R76IW4560(1)20(2)
250	180	6.8	20.0	40.0	41.5	37.5	100	50,000	680	20	2.8	19.5	19	76IW4680(1)30(2)	R76IW4680(1)30(2)
250	180	8.2	24.0	44.0	41.5	37.5	100	50,000	820	20	2.3	22.3	17	76IW4820(1)20(2)	R76IW4820(1)20(2)
250	180	10	24.0	44.0	41.5	37.5	100	50,000	1,000	20	1.9	24.7	17	76IW5100(1)30(2)	R76IW5100(1)30(2)
250	180	12	30.0	45.0	41.5	37.5	100	50,000	1,200	20	1.6	28.0	16	76IW5120(1)30(2)	R76IW5120(1)30(2)
400	250	0.0027	3.0	8.0	10.0	7.5	1,700	1,360,000	5	8	236	0.42	98	76MD1270(1)30(2)	R76MD1270(1)30(2)
400	250	0.0033	3.0	8.0	10.0	7.5	1,700	1,360,000	6	8	193	0.52	98	76MD1330(1)30(2)	R76MD1330(1)30(2)
400	250	0.0039	3.0	8.0	10.0	7.5	1,700	1,360,000	7	8	163	0.61	98	76MD1390(1)30(2)	R76MD1390(1)30(2)
400	250	0.0047	3.0	8.0	10.0	7.5	1,700	1,360,000	8	8	135	0.74	98	76MD1470(1)30(2)	R76MD1470(1)30(2)
400	250	0.0056	3.0	8.0	10.0	7.5	1,700	1,360,000	10	8	114	0.88	98	76MD1560(1)30(2)	R76MD1560(1)30(2)
400	250	0.0068	4.0	9.0	10.0	7.5	1,700	1,360,000	12	8	94	1.07	88	76MD1680(1)40(2)	R76MD1680(1)40(2)
400	250	0.0082	4.0	9.0	10.0	7.5	1,700	1,360,000	14	8	78	1.29	88	76MD1820(1)40(2)	R76MD1820(1)40(2)
400	250	0.010	4.0	9.0	10.0	7.5	1,700	1,360,000	17	8	64	1.57	88	76MD2100(1)40(2)	R76MD2100(1)40(2)
400	250	0.012	4.0	9.0	10.0	7.5	1,700	1,360,000	20	8	53	1.88	88	76MD2120(1)40(2)	R76MD2120(1)40(2)
400	250	0.015	5.0	10.5	10.0	7.5	1,700	1,360,000	26	8	42	2.36	78	76MD2150(1)40(2)	R76MD2150(1)40(2)
400	250	0.018	5.0	10.5	10.0	7.5	1,700	1,360,000	31	8	35	2.69	78	76MD2180(1)40(2)	R76MD2180(1)40(2)
400	250	0.022	6.0	12.0	10.5	7.5	1,700	1,360,000	37	8	29	3.16	69	76MD2220(1)30(2)	R76MD2220(1)30(2)
400	250	0.027	6.0	12.0	10.5	7.5	1,700	1,360,000	46	8	24	3.50	69	76MD2270(1)30(2)	R76MD2270(1)30(2)
400	250	0.010	4.0	9.0	13.0	10.0	1,500	1,200,000	15	9	64	1.57	79	76MF2100(1)00(2)	R76MF2100(1)00(2)
400	250	0.012	4.0	9.0	13.0	10.0	1,500	1,200,000	18	9	53	1.88	79	76MF2120(1)00(2)	R76MF2120(1)00(2)
400	250	0.015	4.0	9.0	13.0	10.0	1,500	1,200,000	23	9	42	2.36	79	76MF2150(1)30(2)	R76MF2150(1)30(2)
400	250	0.018	4.0	9.0	13.0	10.0	1,500	1,200,000	27	9	35	2.68	79	76MF2180(1)30(2)	R76MF2180(1)30(2)
400	250	0.022	4.0	9.0	13.0	10.0	1,500	1,200,000	33	9	29	2.97	79	76MF2220(1)30(2)	R76MF2220(1)30(2)
400	250	0.027	5.0	11.0	13.0	10.0	1,500	1,200,000	41	9	24	3.50	69	76MF2270(1)30(2)	R76MF2270(1)30(2)
400	250	0.033	5.0	11.0	13.0	10.0	1,500	1,200,000	50	9	19	3.87	69	76MF2330(1)30(2)	R76MF2330(1)30(2)
400	250	0.039	6.0	12.0	13.0	10.0	1,500	1,200,000	59	9	16	4.38	64	76MF2390(1)30(2)	R76MF2390(1)30(2)
400	250	0.047	6.0	12.0	13.0	10.0	1,500	1,200,000	71	9	14	4.81	64	76MF2470(1)30(2)	R76MF2470(1)30(2)
400	250	0.033	5.0	11.0	18.0	15.0	900	720,000	30	10	19	4.1	60	76MI2330(1)00(2)	R76MI2330(1)00(2)
400	250	0.039	5.0	11.0	18.0	15.0	900	720,000	35	10	16	4.5	60	76MI2390(1)30(2)	R76MI2390(1)30(2)
400	250	0.047	5.0	11.0	18.0	15.0	900	720,000	42	10	14	5.0	60	76MI2470(1)30(2)	R76MI2470(1)30(2)
400	250	0.056	5.0	11.0	18.0	15.0	900	720,000	50	10	23	3.8	60	76MI2560(1)30(2)	R76MI2560(1)30(2)
VDC	VAC	Cap Value	W	H	L	Lead Spacing (p)	dV/dt (V/µs)	Max K_0 (V^2/µs)	A_{pk}	Lead Length 2x 4 mm	at 100 kHz	at 100 kHz, 85°C	(°C/W)	KEMET Internal Part Number	Customer Part Number
									I_{pkr}	ESL	ESR	$I_{rms\ max}$ (*)	R_{th}		

(1) Insert lead and packaging code. See Ordering Options Table for available options.
(2) H = 2.5% (only for C ≥ 1,000 pF), J = 5%, K = 10%
(*) I_{rms} value that leads to a ΔT of ≈ 20°C in the hot spot > $T_{HS} = T_{AMB} + \Delta T$ = 85°C + 20°C = 105°C

Table 1 – Ratings & Part Number Reference cont.

VDC	VAC	Cap Value (µF)	Dimensions in mm			Lead Spacing (p)	dV/dt (V/µs)	Max K_0 (V^2/µs)	I_{pkr}	ESL	ESR	$I_{rms\ max}$ (*)	Rth	KEMET Internal Part Number	Customer Part Number
										Lead Length 2x 4 mm	at 100 kHz	at 100 kHz, 85°C			
			W	H	L				A_{pk}	nH	mΩ	A_{rms}	(°C/W)		
400	250	0.068	6.0	12.0	18.0	15.0	900	720,000	61	10	19	4.4	56	76MI2680(1)30(2)	R76MI2680(1)30(2)
400	250	0.082	6.0	12.0	18.0	15.0	900	720,000	74	10	16	4.8	56	76MI2820(1)30(2)	R76MI2820(1)30(2)
400	250	0.10	7.5	13.5	18.0	15.0	900	720,000	90	10	13	5.6	51	76MI3100(1)30(2)	R76MI3100(1)30(2)
400	250	0.10	9.0	12.5	18.0	15.0	900	720,000	90	10	13	5.6	50	76MI3100(1)70(2)	R76MI3100(1)70(2)
400	250	0.12	7.5	13.5	18.0	15.0	900	720,000	108	10	13	5.5	51	76MI3120(1)30(2)	R76MI3120(1)30(2)
400	250	0.12	9.0	12.5	18.0	15.0	900	720,000	108	10	13	5.5	50	76MI3120(1)70(2)	R76MI3120(1)70(2)
400	250	0.15	8.5	14.5	18.0	15.0	900	720,000	135	10	11	6.3	48	76MI3150(1)30(2)	R76MI3150(1)30(2)
400	250	0.15	13.0	12.0	18.0	15.0	900	720,000	135	10	11	6.5	45	76MI3150(1)70(2)	R76MI3150(1)70(2)
400	250	0.18	10.0	16.0	18.0	15.0	900	720,000	162	10	9	7.2	44	76MI3180(1)30(2)	R76MI3180(1)30(2)
400	250	0.18	13.0	12.0	18.0	15.0	900	720,000	162	10	9	7.1	45	76MI3180(1)70(2)	R76MI3180(1)70(2)
400	250	0.22	10.0	16.0	18.0	15.0	900	720,000	198	10	7	7.9	44	76MI3220(1)30(2)	R76MI3220(1)30(2)
400	250	0.27	11.0	19.0	18.0	15.0	900	720,000	243	10	6	9.2	40	76MI3270(1)30(2)	R76MI3270(1)30(2)
400	250	0.12	6.0	15.0	26.5	22.5	500	400,000	60	16	13	5.9	43	76MN3120(1)30(2)	R76MN3120(1)30(2)
400	250	0.15	6.0	15.0	26.5	22.5	500	400,000	75	16	11	6.6	43	76MN3150(1)30(2)	R76MN3150(1)30(2)
400	250	0.18	6.0	15.0	26.5	22.5	500	400,000	90	16	9	7.2	43	76MN3180(1)30(2)	R76MN3180(1)30(2)
400	250	0.22	7.0	16.0	26.5	22.5	500	400,000	110	16	7	8.2	41	76MN3220(1)30(2)	R76MN3220(1)30(2)
400	250	0.27	8.5	17.0	26.5	22.5	500	400,000	135	16	6	9.4	38	76MN3270(1)30(2)	R76MN3270(1)30(2)
400	250	0.33	8.5	17.0	26.5	22.5	500	400,000	165	16	5	10.4	38	76MN3330(1)30(2)	R76MN3330(1)30(2)
400	250	0.39	10.0	18.5	26.5	22.5	500	400,000	195	16	4	11.7	36	76MN3390(1)30(2)	R76MN3390(1)30(2)
400	250	0.47	10.0	18.5	26.5	22.5	500	400,000	235	16	3	12.8	36	76MN3470(1)30(2)	R76MN3470(1)30(2)
400	250	0.56	11.0	20.0	26.5	22.5	500	400,000	280	16	3	14.4	34	76MN3560(1)30(2)	R76MN3560(1)30(2)
400	250	0.68	13.0	22.0	26.5	22.5	500	400,000	340	16	2.3	16.5	31	76MN3680(1)30(2)	R76MN3680(1)30(2)
400	250	0.39	9.0	17.0	32.0	27.5	300	240,000	117	18	16	5.9	35	76MR3390(1)30(2)	R76MR3390(1)30(2)
400	250	0.47	9.0	17.0	32.0	27.5	300	240,000	141	18	14	6.5	35	76MR3470(1)30(2)	R76MR3470(1)30(2)
400	250	0.56	11.0	20.0	32.0	27.5	300	240,000	168	18	11	7.5	31	76MR3560(1)30(2)	R76MR3560(1)30(2)
400	250	0.68	11.0	20.0	32.0	27.5	300	240,000	204	18	11	7.8	31	76MR3680(1)30(2)	R76MR3680(1)30(2)
400	250	0.68	24.0	15.0	32.0	27.5	300	240,000	204	18	11	8.4	27	76MR3680(1)L0(2)	R76MR3680(1)L0(2)
400	250	0.82	13.0	22.0	32.0	27.5	300	240,000	246	18	9	8.9	29	76MR3820(1)30(2)	R76MR3820(1)30(2)
400	250	0.82	24.0	15.0	32.0	27.5	300	240,000	246	18	9	9.2	27	76MR3820(1)L0(2)	R76MR3820(1)L0(2)
400	250	1.0	13.0	22.0	32.0	27.5	300	240,000	300	18	7	9.8	29	76MR4100(1)40(2)	R76MR4100(1)40(2)
400	250	1.0	24.0	15.0	32.0	27.5	300	240,000	300	18	7	10.1	27	76MR4100(1)L0(2)	R76MR4100(1)L0(2)
400	250	1.2	14.0	28.0	32.0	27.5	300	240,000	360	18	16	6.9	26	76MR4120(1)40(2)	R76MR4120(1)40(2)
400	250	1.2	24.0	15.0	32.0	27.5	300	240,000	360	18	15.9	6.8	27	76MR4120(1)L0(2)	R76MR4120(1)L0(2)
400	250	1.5	18.0	33.0	32.0	27.5	300	240,000	450	18	12.7	8.3	23	76MR4150(1)30(2)	R76MR4150(1)30(2)
400	250	1.8	18.0	33.0	32.0	27.5	300	240,000	540	18	10.6	9.1	23	76MR4180(1)30(2)	R76MR4180(1)30(2)
400	250	2.2	22.0	37.0	32.0	27.5	300	240,000	660	18	8.7	10.5	21	76MR4220(1)30(2)	R76MR4220(1)30(2)
400	250	2.7	22.0	37.0	32.0	27.5	300	240,000	810	18	7.1	11.7	21	76MR4270(1)30(2)	R76MR4270(1)30(2)
400	250	1.0	11.0	22.0	41.5	37.5	180	144,000	180	20	7	10.2	27	76MW4100(1)30(2)	R76MW4100(1)30(2)
400	250	1.0	24.0	15.0	41.5	37.5	180	144,000	180	20	7	10.7	24	76MW4100(1)L0(2)	R76MW4100(1)L0(2)
400	250	1.2	13.0	24.0	41.5	37.5	180	144,000	216	20	16	7.1	25	76MW4120(1)30(2)	R76MW4120(1)30(2)
400	250	1.2	24.0	15.0	41.5	37.5	180	144,000	216	20	16	7.2	24	76MW4120(1)L0(2)	R76MW4120(1)L0(2)
400	250	1.5	13.0	24.0	41.5	37.5	180	144,000	270	20	13	7.9	25	76MW4150(1)30(2)	R76MW4150(1)30(2)
400	250	1.5	24.0	15.0	41.5	37.5	180	144,000	270	20	13	8.0	24	76MW4150(1)L0(2)	R76MW4150(1)L0(2)
400	250	1.8	16.0	28.5	41.5	37.5	180	144,000	324	20	11	9.1	23	76MW4180(1)30(2)	R76MW4180(1)30(2)
400	250	1.8	24.0	19.0	41.5	37.5	180	144,000	324	20	10.6	9.1	23	76MW4180(1)L0(2)	R76MW4180(1)L0(2)
400	250	2.2	19.0	32.0	41.5	37.5	180	144,000	396	20	8.7	10.6	21	76MW4220(1)30(2)	R76MW4220(1)30(2)
400	250	2.2	24.0	19.0	41.5	37.5	180	144,000	396	20	8.7	10.0	23	76MW4220(1)L0(2)	R76MW4220(1)L0(2)
400	250	2.7	19.0	32.0	41.5	37.5	180	144,000	486	20	7.1	11.7	21	76MW4270(1)30(2)	R76MW4270(1)30(2)
400	250	3.3	19.0	32.0	41.5	37.5	180	144,000	594	20	5.8	12.9	21	76MW4330(1)30(2)	R76MW4330(1)30(2)
400	250	3.9	20.0	40.0	41.5	37.5	180	144,000	702	20	4.9	14.8	19	76MW4390(1)30(2)	R76MW4390(1)30(2)
400	250	4.7	20.0	40.0	41.5	37.5	180	144,000	846	20	4.1	16.2	19	76MW4470(1)30(2)	R76MW4470(1)30(2)
VDC	VAC	Cap Value	W	H	L	Lead Spacing (p)	dV/dt (V/µs)	Max K_0 (V^2/µs)	A_{pk}	Lead Length 2x 4 mm	at 100 kHz	at 100 kHz, 85°C	(°C/W)	KEMET Internal Part Number	Customer Part Number
									I_{pkr}	ESL	ESR	$I_{rms\ max}$ (*)	R_{th}		

(1) Insert lead and packaging code. See Ordering Options Table for available options.
(2) H = 2.5% (only for C ≥ 1,000 pF), J = 5%, K = 10%
(*) I_{rms} value that leads to a ΔT of ≈ 20°C in the hot spot > $T_{HS} = T_{AMB} + \Delta T$ = 85°C + 20°C = 105°C

Table 1 – Ratings & Part Number Reference cont.

VDC	VAC	Cap Value (µF)	Dimensions in mm			Lead Spacing (p)	dV/dt (V/µs)	Max K_0 (V^2/µs)	I_{pkr}	ESL	ESR	$I_{rms\ max}$ (*)	Rth	KEMET Internal Part Number	Customer Part Number
										Lead Length 2x 4 mm	at 100 kHz	at 100 kHz, 85°C			
			W	H	L				A_{pk}	nH	mΩ	A_{rms}	(°C/W)		
400	250	5.6	24.0	44.0	41.5	37.5	180	144,000	1,008	20	3.4	18.4	17	76MW4560(1)30(2)	R76MW4560(1)30(2)
400	250	6.8	30.0	45.0	41.5	37.5	180	144,000	1,224	20	2.8	21.1	16	76MW4680(1)30(2)	R76MW4680(1)30(2)
400	250	8.2	30.0	45.0	41.5	37.5	180	144,000	1,476	20	2.3	23.1	16	76MW4820(1)30(2)	R76MW4820(1)30(2)
630	250	0.00068	3.0	8.0	10.0	7.5	2,800	3,528,000	2	8	936	0.107	98	76PD0680(1)00(2)	R76PD0680(1)00(2)
630	250	0.00082	3.0	8.0	10.0	7.5	2,800	3,528,000	2	8	776	0.129	98	76PD0820(1)00(2)	R76PD0820(1)00(2)
630	250	0.0010	3.0	8.0	10.0	7.5	2,800	3,528,000	3	8	637	0.157	98	76PD1100(1)00(2)	R76PD1100(1)00(2)
630	250	0.0012	3.0	8.0	10.0	7.5	2,800	3,528,000	3	8	531	0.188	98	76PD1120(1)00(2)	R76PD1120(1)00(2)
630	250	0.0015	3.0	8.0	10.0	7.5	2,800	3,528,000	4	8	424	0.236	98	76PD1150(1)00(2)	R76PD1150(1)00(2)
630	250	0.0018	3.0	8.0	10.0	7.5	2,800	3,528,000	5	8	354	0.283	98	76PD1180(1)00(2)	R76PD1180(1)00(2)
630	250	0.0022	3.0	8.0	10.0	7.5	2,800	3,528,000	6	8	289	0.346	98	76PD1220(1)00(2)	R76PD1220(1)00(2)
630	250	0.0027	4.0	9.0	10.0	7.5	2,800	3,528,000	8	8	236	0.424	88	76PD1270(1)40(2)	R76PD1270(1)40(2)
630	250	0.0033	4.0	9.0	10.0	7.5	2,800	3,528,000	9	8	193	0.518	88	76PD1330(1)40(2)	R76PD1330(1)40(2)
630	250	0.0039	4.0	9.0	10.0	7.5	2,800	3,528,000	11	8	163	0.613	88	76PD1390(1)40(2)	R76PD1390(1)40(2)
630	250	0.0047	4.0	9.0	10.0	7.5	2,800	3,528,000	13	8	135	0.738	88	76PD1470(1)40(2)	R76PD1470(1)40(2)
630	250	0.0056	4.0	9.0	10.0	7.5	2,800	3,528,000	16	8	114	0.880	88	76PD1560(1)40(2)	R76PD1560(1)40(2)
630	250	0.0068	5.0	10.5	10.0	7.5	2,800	3,528,000	19	8	94	1.068	78	76PD1680(1)40(2)	R76PD1680(1)40(2)
630	250	0.0082	5.0	10.5	10.0	7.5	2,800	3,528,000	23	8	78	1.288	78	76PD1820(1)40(2)	R76PD1820(1)40(2)
630	250	0.010	6.0	12.0	10.5	7.5	2,800	3,528,000	28	8	64	1.571	69	76PD2100(1)30(2)	R76PD2100(1)30(2)
630	250	0.012	6.0	12.0	10.5	7.5	2,800	3,528,000	34	8	53	1.885	69	76PD2120(1)30(2)	R76PD2120(1)30(2)
630	400	0.0039	4.0	9.0	13.0	10.0	4,000	5,040,000	12	9	163	0.98	79	76PF1390(1)00(2)	R76PF1390(1)00(2)
630	400	0.0047	4.0	9.0	13.0	10.0	4,000	5,040,000	14	9	135	1.18	79	76PF1470(1)00(2)	R76PF1470(1)00(2)
630	400	0.0056	4.0	9.0	13.0	10.0	4,000	5,040,000	17	9	114	1.41	79	76PF1560(1)00(2)	R76PF1560(1)00(2)
630	400	0.0068	4.0	9.0	13.0	10.0	4,000	5,040,000	20	9	94	1.65	79	76PF1680(1)00(2)	R76PF1680(1)00(2)
630	400	0.0082	4.0	9.0	13.0	10.0	4,000	5,040,000	25	9	78	1.81	79	76PF1820(1)00(2)	R76PF1820(1)00(2)
630	400	0.010	5.0	11.0	13.0	10.0	4,000	5,040,000	30	9	64	2.13	69	76PF2100(1)30(2)	R76PF2100(1)30(2)
630	400	0.012	5.0	11.0	13.0	10.0	4,000	5,040,000	36	9	53	2.34	69	76PF2120(1)30(2)	R76PF2120(1)30(2)
630	400	0.015	6.0	12.0	13.0	10.0	4,000	5,040,000	45	9	42	2.72	64	76PF2150(1)30(2)	R76PF2150(1)30(2)
630	400	0.018	6.0	12.0	13.0	10.0	4,000	5,040,000	54	9	35	2.98	64	76PF2180(1)30(2)	R76PF2180(1)30(2)
630	400	0.012	5.0	11.0	18.0	15.0	3,000	3,780,000	30	10	53	2.50	60	76PI2120(1)00(2)	R76PI2120(1)00(2)
630	400	0.015	5.0	11.0	18.0	15.0	3,000	3,780,000	38	10	42	2.80	60	76PI2150(1)00(2)	R76PI2150(1)00(2)
630	400	0.018	5.0	11.0	18.0	15.0	3,000	3,780,000	45	10	35	3.06	60	76PI2180(1)00(2)	R76PI2180(1)00(2)
630	400	0.022	5.0	11.0	18.0	15.0	3,000	3,780,000	55	10	29	3.39	60	76PI2220(1)30(2)	R76PI2220(1)30(2)
630	400	0.027	5.0	11.0	18.0	15.0	3,000	3,780,000	68	10	24	3.75	60	76PI2270(1)30(2)	R76PI2270(1)30(2)
630	400	0.033	6.0	12.0	18.0	15.0	3,000	3,780,000	83	10	19	4.31	56	76PI2330(1)30(2)	R76PI2330(1)30(2)
630	400	0.039	6.0	12.0	18.0	15.0	3,000	3,780,000	98	10	16	4.7	56	76PI2390(1)30(2)	R76PI2390(1)30(2)
630	400	0.047	7.5	13.5	18.0	15.0	3,000	3,780,000	118	10	14	5.4	51	76PI2470(1)30(2)	R76PI2470(1)30(2)
630	400	0.047	9.0	12.5	18.0	15.0	3,000	3,780,000	118	10	14	5.5	50	76PI2470(1)70(2)	R76PI2470(1)70(2)
630	400	0.056	7.5	13.5	18.0	15.0	3,000	3,780,000	140	10	23	4.2	51	76PI2560(1)30(2)	R76PI2560(1)30(2)
630	400	0.056	9.0	12.5	18.0	15.0	3,000	3,780,000	140	10	23	4.2	50	76PI2560(1)70(2)	R76PI2560(1)70(2)
630	400	0.068	8.5	14.5	18.0	15.0	3,000	3,780,000	170	10	19	4.7	48	76PI2680(1)30(2)	R76PI2680(1)30(2)
630	400	0.068	9.0	12.5	18.0	15.0	3,000	3,780,000	170	10	19	4.6	50	76PI2680(1)70(2)	R76PI2680(1)70(2)
630	400	0.082	8.5	14.5	18.0	15.0	3,000	3,780,000	205	10	16	5.2	48	76PI2820(1)30(2)	R76PI2820(1)30(2)
630	400	0.082	13.0	12.0	18.0	15.0	3,000	3,780,000	205	10	16	5.4	45	76PI2820(1)70(2)	R76PI2820(1)70(2)
630	400	0.10	10.0	16.0	18.0	15.0	3,000	3,780,000	250	10	13	6.0	44	76PI3100(1)30(2)	R76PI3100(1)30(2)
630	400	0.12	11.0	19.0	18.0	15.0	3,000	3,780,000	300	10	13	6.1	40	76PI3120(1)30(2)	R76PI3120(1)30(2)
630	400	0.047	6.0	15.0	26.5	22.5	1,500	1,890,000	71	16	14	5.8	43	76PN2470(1)00(2)	R76PN2470(1)00(2)
630	400	0.056	6.0	15.0	26.5	22.5	1,500	1,890,000	84	16	23	4.5	43	76PN2560(1)00(2)	R76PN2560(1)00(2)
630	400	0.068	6.0	15.0	26.5	22.5	1,500	1,890,000	102	16	19	5.0	43	76PN2680(1)00(2)	R76PN2680(1)00(2)
630	400	0.082	6.0	15.0	26.5	22.5	1,500	1,890,000	123	16	16	5.4	43	76PN2820(1)30(2)	R76PN2820(1)30(2)
630	400	0.10	6.0	15.0	26.5	22.5	1,500	1,890,000	150	16	13	6.0	43	76PN3100(1)30(2)	R76PN3100(1)30(2)
630	400	0.12	7.0	16.0	26.5	22.5	1,500	1,890,000	180	16	13	6.1	41	76PN3120(1)30(2)	R76PN3120(1)30(2)
VDC	VAC	Cap Value	W	H	L	Lead Spacing (p)	dV/dt (V/µs)	Max K_0 (V^2/µs)	A_{pk}	Lead Length 2x 4 mm	at 100 kHz	at 100 kHz, 85°C	(°C/W)	KEMET Internal Part Number	Customer Part Number
									I_{pkr}	ESL	ESR	$I_{rms\ max}$ (*)	R_{th}		

(1) Insert lead and packaging code. See Ordering Options Table for available options.
(2) H = 2.5% (only for C ≥ 1,000 pF), J = 5%, K = 10%
(*) I_{rms} value that leads to a ΔT of ≈ 20°C in the hot spot > $T_{HS} = T_{AMB} + \Delta T$ = 85°C + 20°C = 105°C

Table 1 – Ratings & Part Number Reference cont.

VDC	VAC	Cap Value (µF)	Dimensions in mm			Lead Spacing (p)	dV/dt (V/µs)	Max K_0 (V^2/µs)	I_{pkr}	ESL Lead Length 2x 4 mm	ESR at 100 kHz	$I_{rms\ max}$ (*) at 100 kHz, 85°C	Rth	KEMET Internal Part Number	Customer Part Number
			W	H	L				A_{pk}	nH	mΩ	A_{rms}	(°C/W)		
630	400	0.15	8.5	17.0	26.5	22.5	1,500	1,890,000	225	16	11	7.0	38	76PN3150(1)30(2)	R76PN3150(1)30(2)
630	400	0.18	8.5	17.0	26.5	22.5	1,500	1,890,000	270	16	9	7.7	38	76PN3180(1)30(2)	R76PN3180(1)30(2)
630	400	0.22	10.0	18.5	26.5	22.5	1,500	1,890,000	330	16	7	8.8	36	76PN3220(1)30(2)	R76PN3220(1)30(2)
630	400	0.27	11.0	20.0	26.5	22.5	1,500	1,890,000	405	16	6	10.0	34	76PN3270(1)30(2)	R76PN3270(1)30(2)
630	400	0.33	11.0	20.0	26.5	22.5	1,500	1,890,000	495	16	5	11.1	34	76PN3330(1)30(2)	R76PN3330(1)30(2)
630	400	0.39	13.0	22.0	26.5	22.5	1,500	1,890,000	585	16	4	12.5	31	76PN3390(1)30(2)	R76PN3390(1)30(2)
630	400	0.15	9.0	17.0	32.0	27.5	900	1,134,000	135	18	21	5.2	35	76PR3150(1)30(2)	R76PR3150(1)30(2)
630	400	0.18	9.0	17.0	32.0	27.5	900	1,134,000	162	18	18	5.7	35	76PR3180(1)30(2)	R76PR3180(1)30(2)
630	400	0.22	9.0	17.0	32.0	27.5	900	1,134,000	198	18	14	6.3	35	76PR3220(1)30(2)	R76PR3220(1)30(2)
630	400	0.27	9.0	17.0	32.0	27.5	900	1,134,000	243	18	15	6.2	35	76PR3270(1)30(2)	R76PR3270(1)30(2)
630	400	0.33	11.0	20.0	32.0	27.5	900	1,134,000	297	18	12	7.3	31	76PR3330(1)40(2)	R76PR3330(1)40(2)
630	400	0.39	11.0	20.0	32.0	27.5	900	1,134,000	351	18	16	6.2	31	76PR3390(1)30(2)	R76PR3390(1)30(2)
630	400	0.39	24.0	15.0	32.0	27.5	900	1,134,000	351	18	16	6.7	27	76PR3390(1)L0(2)	R76PR3390(1)L0(2)
630	400	0.47	13.0	22.0	32.0	27.5	900	1,134,000	423	18	14	7.1	29	76PR3470(1)30(2)	R76PR3470(1)30(2)
630	400	0.47	24.0	15.0	32.0	27.5	900	1,134,000	423	18	14	7.4	27	76PR3470(1)L0(2)	R76PR3470(1)L0(2)
630	400	0.56	13.0	22.0	32.0	27.5	900	1,134,000	504	18	11	7.8	29	76PR3560(1)30(2)	R76PR3560(1)30(2)
630	400	0.56	24.0	15.0	32.0	27.5	900	1,134,000	504	18	11	8.1	27	76PR3560(1)L0(2)	R76PR3560(1)L0(2)
630	400	0.68	13.0	25.0	32.0	27.5	900	1,134,000	612	18	11	8.3	28	76PR3680(1)40(2)	R76PR3680(1)40(2)
630	400	0.68	24.0	15.0	32.0	27.5	900	1,134,000	612	18	11	8.4	27	76PR3680(1)L0(2)	R76PR3680(1)L0(2)
630	400	0.82	14.0	28.0	32.0	27.5	900	1,134,000	738	18	9	9.4	26	76PR3820(1)30(2)	R76PR3820(1)30(2)
630	400	1.0	18.0	33.0	32.0	27.5	900	1,134,000	900	18	7.2	11.0	23	76PR4100(1)30(2)	R76PR4100(1)30(2)
630	400	1.2	18.0	33.0	32.0	27.5	900	1,134,000	1,080	18	15.9	7.4	23	76PR4120(1)30(2)	R76PR4120(1)30(2)
630	400	1.5	22.0	37.0	32.0	27.5	900	1,134,000	1,350	18	12.7	8.7	21	76PR4150(1)30(2)	R76PR4150(1)30(2)
630	400	1.8	22.0	37.0	32.0	27.5	900	1,134,000	1,620	18	10.6	9.5	21	76PR4180(1)30(2)	R76PR4180(1)30(2)
630	400	0.33	11.0	22.0	41.5	37.5	450	567,000	149	20	12	7.8	27	76PW3330(1)30(2)	R76PW3330(1)30(2)
630	400	0.39	11.0	22.0	41.5	37.5	450	567,000	176	20	16	6.7	27	76PW3390(1)30(2)	R76PW3390(1)30(2)
630	400	0.47	11.0	22.0	41.5	37.5	450	567,000	212	20	14	7.4	27	76PW3470(1)30(2)	R76PW3470(1)30(2)
630	400	0.56	11.0	22.0	41.5	37.5	450	567,000	252	20	11	8.1	27	76PW3560(1)30(2)	R76PW3560(1)30(2)
630	400	0.68	11.0	22.0	41.5	37.5	450	567,000	306	20	11	8.4	27	76PW3680(1)30(2)	R76PW3680(1)30(2)
630	400	0.68	24.0	15.0	41.5	37.5	450	567,000	306	20	11	8.8	24	76PW3680(1)L0(2)	R76PW3680(1)L0(2)
630	400	0.82	13.0	24.0	41.5	37.5	450	567,000	369	20	9	9.5	25	76PW3820(1)30(2)	R76PW3820(1)30(2)
630	400	0.82	24.0	15.0	41.5	37.5	450	567,000	369	20	9	9.7	24	76PW3820(1)L0(2)	R76PW3820(1)L0(2)
630	400	1.0	16.0	28.5	41.5	37.5	450	567,000	450	20	7	11.1	23	76PW4100(1)30(2)	R76PW4100(1)30(2)
630	400	1.0	24.0	15.0	41.5	37.5	450	567,000	450	20	7	10.7	24	76PW4100(1)L0(2)	R76PW4100(1)L0(2)
630	400	1.2	16.0	28.5	41.5	37.5	450	567,000	540	20	16	7.5	23	76PW4120(1)30(2)	R76PW4120(1)30(2)
630	400	1.2	24.0	19.0	41.5	37.5	450	567,000	540	20	16	7.4	23	76PW4120(1)L0(2)	R76PW4120(1)L0(2)
630	400	1.5	16.0	28.5	41.5	37.5	450	567,000	675	20	13	8.3	23	76PW4150(1)30(2)	R76PW4150(1)30(2)
630	400	1.5	24.0	19.0	41.5	37.5	450	567,000	675	20	13	8.3	23	76PW4150(1)L0(2)	R76PW4150(1)L0(2)
630	400	1.8	19.0	32.0	41.5	37.5	450	567,000	810	20	10.6	9.5	21	76PW4180(1)30(2)	R76PW4180(1)30(2)
630	400	2.2	20.0	40.0	41.5	37.5	450	567,000	990	20	8.7	11.1	19	76PW4220(1)30(2)	R76PW4220(1)30(2)
630	400	2.7	20.0	40.0	41.5	37.5	450	567,000	1,215	20	7.1	12.3	19	76PW4270(1)30(2)	R76PW4270(1)30(2)
630	400	3.3	24.0	44.0	41.5	37.5	450	567,000	1,485	20	5.8	14.2	17	76PW4330(1)30(2)	R76PW4330(1)30(2)
630	400	3.9	30.0	45.0	41.5	37.5	450	567,000	1,755	20	4.9	16.0	16	76PW4390(1)30(2)	R76PW4390(1)30(2)
1,000	400	0.00022	3.0	8.0	10.0	7.5	6,000	12,000,000	1	8	2,894	0.055	98	76QD0220(1)00(2)	R76QD0220(1)00(2)
1,000	400	0.00027	3.0	8.0	10.0	7.5	6,000	12,000,000	2	8	2,358	0.068	98	76QD0270(1)00(2)	R76QD0270(1)00(2)
1,000	400	0.00033	3.0	8.0	10.0	7.5	6,000	12,000,000	2	8	1,929	0.083	98	76QD0330(1)00(2)	R76QD0330(1)00(2)
1,000	400	0.00039	3.0	8.0	10.0	7.5	6,000	12,000,000	2	8	1,632	0.098	98	76QD0390(1)00(2)	R76QD0390(1)00(2)
1,000	400	0.00047	3.0	8.0	10.0	7.5	6,000	12,000,000	3	8	1,355	0.118	98	76QD0470(1)00(2)	R76QD0470(1)00(2)
1,000	400	0.00056	3.0	8.0	10.0	7.5	6,000	12,000,000	3	8	1,137	0.141	98	76QD0560(1)00(2)	R76QD0560(1)00(2)
1,000	400	0.00068	4.0	9.0	10.0	7.5	6,000	12,000,000	4	8	936	0.171	88	76QD0680(1)40(2)	R76QD0680(1)40(2)
1,000	400	0.00082	4.0	9.0	10.0	7.5	6,000	12,000,000	5	8	776	0.206	88	76QD0820(1)40(2)	R76QD0820(1)40(2)
VDC	VAC	Cap Value	W	H	L	Lead Spacing (p)	dV/dt (V/µs)	Max K_0 (V^2/µs)	A_{pk} / I_{pkr}	Lead Length 2x 4 mm / ESL	at 100 kHz / ESR	at 100 kHz, 85°C / $I_{rms\ max}$ (*)	(°C/W) / R_{th}	KEMET Internal Part Number	Customer Part Number

(1) Insert lead and packaging code. See Ordering Options Table for available options.
(2) H = 2.5% (only for C ≥ 1,000 pF), J = 5%, K = 10%
(*) I_{rms} value that leads to a ΔT of ≈ 20°C in the hot spot > $T_{HS} = T_{AMB} + \Delta T$ = 85°C + 20°C = 105°C

Table 1 – Ratings & Part Number Reference cont.

VDC	VAC	Cap Value (µF)	Dimensions in mm			Lead Spacing (p)	dV/dt (V/µs)	Max K_0 (V^2/µs)	I_{pkr}	ESL	ESR	$I_{rms\ max}$ (*)	Rth	KEMET Internal Part Number	Customer Part Number
										Lead Length 2x 4 mm	at 100 kHz	at 100 kHz, 85°C			
			W	H	L				A_{pk}	nH	mΩ	A_{rms}	(°C/W)		
1,000	400	0.0010	4.0	9.0	10.0	7.5	6,000	12,000,000	6	8	637	0.251	88	76QD1100(1)40(2)	R76QD1100(1)40(2)
1,000	400	0.0012	4.0	9.0	10.0	7.5	6,000	12,000,000	7	8	531	0.302	88	76QD1120(1)40(2)	R76QD1120(1)40(2)
1,000	400	0.0015	5.0	10.5	10.0	7.5	6,000	12,000,000	9	8	424	0.377	78	76QD1150(1)40(2)	R76QD1150(1)40(2)
1,000	400	0.0018	5.0	10.5	10.0	7.5	6,000	12,000,000	11	8	354	0.452	78	76QD1180(1)40(2)	R76QD1180(1)40(2)
1,000	400	0.0022	5.0	10.5	10.0	7.5	6,000	12,000,000	13	8	289	0.553	78	76QD1220(1)40(2)	R76QD1220(1)40(2)
1,000	400	0.0027	6.0	12.0	10.5	7.5	6,000	12,000,000	16	8	236	0.679	69	76QD1270(1)00(2)	R76QD1270(1)00(2)
1,000	400	0.0033	6.0	12.0	10.5	7.5	6,000	12,000,000	20	8	193	0.829	69	76QD1330(1)00(2)	R76QD1330(1)00(2)
1,000	600	0.00047	4.0	9.0	13.0	10.0	6,500	13,000,000	2	9	1,355	0.177	79	76QF0470(1)00(2)	R76QF0470(1)00(2)
1,000	600	0.00056	4.0	9.0	13.0	10.0	6,500	13,000,000	3	9	1,137	0.211	79	76QF0560(1)00(2)	R76QF0560(1)00(2)
1,000	600	0.00068	4.0	9.0	13.0	10.0	6,500	13,000,000	3	9	936	0.256	79	76QF0680(1)00(2)	R76QF0680(1)00(2)
1,000	600	0.00082	4.0	9.0	13.0	10.0	6,500	13,000,000	4	9	776	0.309	79	76QF0820(1)00(2)	R76QF0820(1)00(2)
1,000	600	0.0010	4.0	9.0	13.0	10.0	6,500	13,000,000	5	9	637	0.377	79	76QF1100(1)00(2)	R76QF1100(1)00(2)
1,000	600	0.0012	4.0	9.0	13.0	10.0	6,500	13,000,000	6	9	531	0.452	79	76QF1120(1)00(2)	R76QF1120(1)00(2)
1,000	600	0.0015	4.0	9.0	13.0	10.0	6,500	13,000,000	7	9	424	0.565	79	76QF1150(1)00(2)	R76QF1150(1)00(2)
1,000	600	0.0018	4.0	9.0	13.0	10.0	6,500	13,000,000	9	9	354	0.679	79	76QF1180(1)00(2)	R76QF1180(1)00(2)
1,000	600	0.0022	4.0	9.0	13.0	10.0	6,500	13,000,000	11	9	289	0.829	79	76QF1220(1)00(2)	R76QF1220(1)00(2)
1,000	600	0.0027	4.0	9.0	13.0	10.0	6,500	13,000,000	13	9	236	1.02	79	76QF1270(1)00(2)	R76QF1270(1)00(2)
1,000	600	0.0033	4.0	9.0	13.0	10.0	6,500	13,000,000	16	9	193	1.15	79	76QF1330(1)30(2)	R76QF1330(1)30(2)
1,000	600	0.0039	5.0	11.0	13.0	10.0	6,500	13,000,000	19	9	163	1.33	69	76QF1390(1)30(2)	R76QF1390(1)30(2)
1,000	600	0.0047	5.0	11.0	13.0	10.0	6,500	13,000,000	23	9	135	1.46	69	76QF1470(1)30(2)	R76QF1470(1)30(2)
1,000	600	0.0056	6.0	12.0	13.0	10.0	6,500	13,000,000	27	9	114	1.66	64	76QF1560(1)30(2)	R76QF1560(1)30(2)
1,000	600	0.0068	6.0	12.0	13.0	10.0	6,500	13,000,000	33	9	94	1.83	64	76QF1680(1)30(2)	R76QF1680(1)30(2)
1,000	600	0.0082	4.0	10.0	18.0	15.0	3,500	7,000,000	27	10	78	1.98	65	76QI1820(1)40(2)	R76QI1820(1)40(2)
1,000	600	0.0082	5.0	11.0	18.0	15.0	3,500	7,000,000	27	10	78	2.07	60	76QI1820(1)00(2)	R76QI1820(1)00(2)
1,000	600	0.010	4.0	10.0	18.0	15.0	3,500	7,000,000	33	10	64	2.19	65	76QI2100(1)40(2)	R76QI2100(1)40(2)
1,000	600	0.010	5.0	11.0	18.0	15.0	3,500	7,000,000	33	10	64	2.28	60	76QI2100(1)30(2)	R76QI2100(1)30(2)
1,000	600	0.012	5.0	11.0	18.0	15.0	3,500	7,000,000	40	10	53	2.50	60	76QI2120(1)30(2)	R76QI2120(1)30(2)
1,000	600	0.015	5.0	11.0	18.0	15.0	3,500	7,000,000	50	10	42	2.80	60	76QI2150(1)40(2)	R76QI2150(1)40(2)
1,000	600	0.018	5.0	11.0	18.0	15.0	3,500	7,000,000	59	10	35	3.06	60	76QI2180(1)40(2)	R76QI2180(1)40(2)
1,000	600	0.022	6.0	12.0	18.0	15.0	3,500	7,000,000	73	10	29	3.52	56	76QI2220(1)40(2)	R76QI2220(1)40(2)
1,000	600	0.022	9.0	12.5	18.0	15.0	3,500	7,000,000	73	10	29	3.73	50	76QI2220(1)70(2)	R76QI2220(1)70(2)
1,000	600	0.027	7.5	13.5	18.0	15.0	3,500	7,000,000	89	10	24	4.1	51	76QI2270(1)40(2)	R76QI2270(1)40(2)
1,000	600	0.027	9.0	12.5	18.0	15.0	3,500	7,000,000	89	10	24	4.1	50	76QI2270(1)70(2)	R76QI2270(1)70(2)
1,000	600	0.033	7.5	13.5	18.0	15.0	3,500	7,000,000	109	10	19	4.5	51	76QI2330(1)40(2)	R76QI2330(1)40(2)
1,000	600	0.033	13.0	12.0	18.0	15.0	3,500	7,000,000	109	10	19	4.8	45	76QI2330(1)70(2)	R76QI2330(1)70(2)
1,000	600	0.039	8.5	14.5	18.0	15.0	3,500	7,000,000	129	10	16	5.1	48	76QI2390(1)40(2)	R76QI2390(1)40(2)
1,000	600	0.047	8.5	14.5	18.0	15.0	3,500	7,000,000	155	10	14	5.6	48	76QI2470(1)40(2)	R76QI2470(1)40(2)
1,000	600	0.027	6.0	15.0	26.5	22.5	2,100	4,200,000	57	16	24	4.4	43	76QN2270(1)00(2)	R76QN2270(1)00(2)
1,000	600	0.033	6.0	15.0	26.5	22.5	2,100	4,200,000	69	16	19	4.9	43	76QN2330(1)30(2)	R76QN2330(1)30(2)
1,000	600	0.039	6.0	15.0	26.5	22.5	2,100	4,200,000	82	16	16	5.3	43	76QN2390(1)30(2)	R76QN2390(1)30(2)
1,000	600	0.047	7.0	16.0	26.5	22.5	2,100	4,200,000	99	16	14	6.0	41	76QN2470(1)30(2)	R76QN2470(1)30(2)
1,000	600	0.056	7.0	16.0	26.5	22.5	2,100	4,200,000	118	16	23	4.6	41	76QN2560(1)30(2)	R76QN2560(1)30(2)
1,000	600	0.068	8.5	17.0	26.5	22.5	2,100	4,200,000	143	16	19	5.3	38	76QN2680(1)30(2)	R76QN2680(1)30(2)
1,000	600	0.082	10.0	18.5	26.5	22.5	2,100	4,200,000	172	16	16	6.0	36	76QN2820(1)30(2)	R76QN2820(1)30(2)
1,000	600	0.10	10.0	18.5	26.5	22.5	2,100	4,200,000	210	16	13	6.6	36	76QN3100(1)30(2)	R76QN3100(1)30(2)
1,000	600	0.12	11.0	20.0	26.5	22.5	2,100	4,200,000	252	16	13	6.7	34	76QN3120(1)30(2)	R76QN3120(1)30(2)
1,000	600	0.15	13.0	22.0	26.5	22.5	2,100	4,200,000	315	16	11	7.8	31	76QN3150(1)30(2)	R76QN3150(1)30(2)
1,000	600	0.10	9.0	17.0	32.0	27.5	1,000	2,000,000	100	18	24	4.9	35	76QR3100(1)40(2)	R76QR3100(1)40(2)
1,000	600	0.12	9.0	17.0	32.0	27.5	1,000	2,000,000	120	18	27	4.6	35	76QR3120(1)40(2)	R76QR3120(1)40(2)
1,000	600	0.15	11.0	20.0	32.0	27.5	1,000	2,000,000	150	18	21	5.5	31	76QR3150(1)30(2)	R76QR3150(1)30(2)
1,000	600	0.18	13.0	22.0	32.0	27.5	1,000	2,000,000	180	18	18	6.2	29	76QR3180(1)30(2)	R76QR3180(1)30(2)
VDC	VAC	Cap Value	W	H	L	Lead Spacing (p)	dV/dt (V/µs)	Max K_0 (V^2/µs)	A_{pk}	Lead Length 2x 4 mm	at 100 kHz	at 100 kHz, 85°C	(°C/W)	KEMET Internal Part Number	Customer Part Number
									I_{pkr}	ESL	ESR	$I_{rms\ max}$ (*)	R_{th}		

(1) Insert lead and packaging code. See Ordering Options Table for available options.
(2) H = 2.5% (only for C ≥ 1,000 pF), J = 5%, K = 10%
(*) I_{rms} value that leads to a ΔT of ≈ 20°C in the hot spot > $T_{HS} = T_{AMB} + \Delta T$ = 85°C + 20°C = 105°C

Table 1 – Ratings & Part Number Reference cont.

VDC	VAC	Cap Value (µF)	Dimensions in mm			Lead Spacing (p)	dV/dt (V/µs)	Max K_0 (V^2/µs)	I_{pkr}	ESL	ESR	$I_{rms\ max}$ (*)	Rth	KEMET Internal Part Number	Customer Part Number
										Lead Length 2x 4 mm	at 100 kHz	at 100 kHz, 85°C			
			W	H	L				A_{pk}	nH	mΩ	A_{rms}	(°C/W)		
1,000	600	0.18	24.0	15.0	32.0	27.5	1,000	2,000,000	180	18	18	6.5	27	76QR3180(1)L0(2)	R76QR3180(1)L0(2)
1,000	600	0.22	13.0	22.0	32.0	27.5	1,000	2,000,000	220	18	14	6.9	29	76QR3220(1)30(2)	R76QR3220(1)30(2)
1,000	600	0.22	24.0	15.0	32.0	27.5	1,000	2,000,000	220	18	14	7.1	27	76QR3220(1)L0(2)	R76QR3220(1)L0(2)
1,000	600	0.27	13.0	25.0	32.0	27.5	1,000	2,000,000	270	18	15	7.0	28	76QR3270(1)40(2)	R76QR3270(1)40(2)
1,000	600	0.27	24.0	15.0	32.0	27.5	1,000	2,000,000	270	18	15	7.1	27	76QR3270(1)L0(2)	R76QR3270(1)L0(2)
1,000	600	0.33	14.0	28.0	32.0	27.5	1,000	2,000,000	330	18	12	8.0	26	76QR3330(1)30(2)	R76QR3330(1)30(2)
1,000	600	0.39	18.0	33.0	32.0	27.5	1,000	2,000,000	390	18	16	7.3	23	76QR3390(1)30(2)	R76QR3390(1)30(2)
1,000	600	0.47	18.0	33.0	32.0	27.5	1,000	2,000,000	470	18	14	8.0	23	76QR3470(1)30(2)	R76QR3470(1)30(2)
1,000	600	0.56	22.0	37.0	32.0	27.5	1,000	2,000,000	560	18	11	9.2	21	76QR3560(1)30(2)	R76QR3560(1)30(2)
1,000	600	0.68	22.0	37.0	32.0	27.5	1,000	2,000,000	680	18	11	9.6	21	76QR3680(1)30(2)	R76QR3680(1)30(2)
1,000	600	0.18	11.0	22.0	41.5	37.5	500	1,000,000	90	20	18	6.5	27	76QW3180(1)30(2)	R76QW3180(1)30(2)
1,000	600	0.22	11.0	22.0	41.5	37.5	500	1,000,000	110	20	14	7.1	27	76QW3220(1)30(2)	R76QW3220(1)30(2)
1,000	600	0.27	13.0	24.0	41.5	37.5	500	1,000,000	135	20	15	7.3	25	76QW3270(1)30(2)	R76QW3270(1)30(2)
1,000	600	0.27	24.0	15.0	41.5	37.5	500	1,000,000	135	20	15	7.5	24	76QW3270(1)L0(2)	R76QW3270(1)L0(2)
1,000	600	0.33	13.0	24.0	41.5	37.5	500	1,000,000	165	20	12	8.1	25	76QW3330(1)30(2)	R76QW3330(1)30(2)
1,000	600	0.33	24.0	15.0	41.5	37.5	500	1,000,000	165	20	12	8.2	24	76QW3330(1)L0(2)	R76QW3330(1)L0(2)
1,000	600	0.39	16.0	28.5	41.5	37.5	500	1,000,000	195	20	16	7.4	23	76QW3390(1)30(2)	R76QW3390(1)30(2)
1,000	600	0.39	24.0	15.0	41.5	37.5	500	1,000,000	195	20	16	7.1	24	76QW3390(1)L0(2)	R76QW3390(1)L0(2)
1,000	600	0.47	16.0	28.5	41.5	37.5	500	1,000,000	235	20	14	8.1	23	76QW3470(1)30(2)	R76QW3470(1)30(2)
1,000	600	0.47	24.0	19.0	41.5	37.5	500	1,000,000	235	20	14	8.0	23	76QW3470(1)L0(2)	R76QW3470(1)L0(2)
1,000	600	0.56	16.0	28.5	41.5	37.5	500	1,000,000	280	20	11	8.8	23	76QW3560(1)30(2)	R76QW3560(1)30(2)
1,000	600	0.56	24.0	19.0	41.5	37.5	500	1,000,000	280	20	11	8.8	23	76QW3560(1)L0(2)	R76QW3560(1)L0(2)
1,000	600	0.68	19.0	32.0	41.5	37.5	500	1,000,000	340	20	11	9.6	21	76QW3680(1)30(2)	R76QW3680(1)30(2)
1,000	600	0.82	20.0	40.0	41.5	37.5	500	1,000,000	410	20	9	11.0	19	76QW3820(1)30(2)	R76QW3820(1)30(2)
1,000	600	1.0	20.0	40.0	41.5	37.5	500	1,000,000	500	20	7.2	12.2	19	76QW4100(1)30(2)	R76QW4100(1)30(2)
1,000	600	1.2	24.0	44.0	41.5	37.5	500	1,000,000	600	20	15.9	8.5	17	76QW4120(1)30(2)	R76QW4120(1)30(2)
1,000	600	1.5	24.0	44.0	41.5	37.5	500	1,000,000	750	20	12.7	9.5	17	76QW4150(1)30(2)	R76QW4150(1)30(2)
1,000	600	2.2	30.0	45.0	41.5	37.5	500	1,000,000	1,100	20	8.7	11.6	17	76QW4220(1)30(2)	R76QW4220(1)30(2)
1,600	650	0.0033	4.0	10.0	18.0	15.0	6,000	19,200,000	20	10	193	1.26	65	76TI1330(1)40(2)	R76TI1330(1)40(2)
1,600	650	0.0033	5.0	11.0	18.0	15.0	6,000	19,200,000	20	10	193	1.31	60	76TI1330(1)30(2)	R76TI1330(1)30(2)
1,600	650	0.0039	4.0	10.0	18.0	15.0	6,000	19,200,000	23	10	163	1.37	65	76TI1390(1)40(2)	R76TI1390(1)40(2)
1,600	650	0.0039	5.0	11.0	18.0	15.0	6,000	19,200,000	23	10	163	1.43	60	76TI1390(1)30(2)	R76TI1390(1)30(2)
1,600	650	0.0047	4.0	10.0	18.0	15.0	6,000	19,200,000	28	10	135	1.50	65	76TI1470(1)40(2)	R76TI1470(1)40(2)
1,600	650	0.0047	5.0	11.0	18.0	15.0	6,000	19,200,000	28	10	135	1.57	60	76TI1470(1)30(2)	R76TI1470(1)30(2)
1,600	650	0.0056	4.0	10.0	18.0	15.0	6,000	19,200,000	34	10	114	1.64	65	76TI1560(1)40(2)	R76TI1560(1)40(2)
1,600	650	0.0056	5.0	11.0	18.0	15.0	6,000	19,200,000	34	10	114	1.71	60	76TI1560(1)30(2)	R76TI1560(1)30(2)
1,600	650	0.0068	5.0	11.0	18.0	15.0	6,000	19,200,000	41	10	94	1.88	60	76TI1680(1)30(2)	R76TI1680(1)30(2)
1,600	650	0.0082	5.0	11.0	18.0	15.0	6,000	19,200,000	49	10	78	2.07	60	76TI1820(1)40(2)	R76TI1820(1)40(2)
1,600	650	0.010	5.0	11.0	18.0	15.0	6,000	19,200,000	60	10	64	2.28	60	76TI2100(1)40(2)	R76TI2100(1)40(2)
1,600	650	0.012	6.0	12.0	18.0	15.0	6,000	19,200,000	72	10	53	2.60	56	76TI2120(1)40(2)	R76TI2120(1)40(2)
1,600	650	0.015	6.0	12.0	18.0	15.0	6,000	19,200,000	90	10	42	2.90	56	76TI2150(1)40(2)	R76TI2150(1)40(2)
1,600	650	0.018	7.5	13.5	18.0	15.0	6,000	19,200,000	108	10	35	3.34	51	76TI2180(1)40(2)	R76TI2180(1)40(2)
1,600	650	0.018	9.0	12.5	18.0	15.0	6,000	19,200,000	108	10	35	3.38	50	76TI2180(1)70(2)	R76TI2180(1)70(2)
1,600	650	0.022	7.5	13.5	18.0	15.0	6,000	19,200,000	132	10	29	3.69	51	76TI2220(1)40(2)	R76TI2220(1)40(2)
1,600	650	0.022	13.0	12.0	18.0	15.0	6,000	19,200,000	132	10	29	3.92	45	76TI2220(1)70(2)	R76TI2220(1)70(2)
1,600	650	0.027	8.5	14.5	18.0	15.0	6,000	19,200,000	162	10	24	4.2	48	76TI2270(1)40(2)	R76TI2270(1)40(2)
1,600	650	0.033	8.5	14.5	18.0	15.0	6,000	19,200,000	198	10	19	4.7	48	76TI2330(1)40(2)	R76TI2330(1)40(2)
1,600	650	0.015	6.0	15.0	26.5	22.5	3,000	9,600,000	45	16	42	3.3	43	76TN2150(1)30(2)	R76TN2150(1)30(2)
1,600	650	0.018	6.0	15.0	26.5	22.5	3,000	9,600,000	54	16	35	3.6	43	76TN2180(1)30(2)	R76TN2180(1)30(2)
1,600	650	0.022	6.0	15.0	26.5	22.5	3,000	9,600,000	66	16	29	4.0	43	76TN2220(1)30(2)	R76TN2220(1)30(2)
1,600	650	0.027	6.0	15.0	26.5	22.5	3,000	9,600,000	81	16	24	4.4	43	76TN2270(1)30(2)	R76TN2270(1)30(2)
VDC	VAC	Cap Value	W	H	L	Lead Spacing (p)	dV/dt (V/µs)	Max K_0 (V^2/µs)	A_{pk}	Lead Length 2x 4 mm	at 100 kHz	at 100 kHz, 85°C	(°C/W)	KEMET Internal Part Number	Customer Part Number
									I_{pkr}	ESL	ESR	$I_{rms\ max}$ (*)	R_{th}		

(1) Insert lead and packaging code. See Ordering Options Table for available options.
(2) H = 2.5% (only for C ≥ 1,000 pF), J = 5%, K = 10%
(*) I_{rms} value that leads to a ΔT of ≈ 20°C in the hot spot > $T_{HS} = T_{AMB} + \Delta T$ = 85°C + 20°C = 105°C

Table 1 – Ratings & Part Number Reference cont.

VDC	VAC	Cap Value (µF)	Dimensions in mm			Lead Spacing (p)	dV/dt (V/µs)	Max K_0 (V^2/µs)	I_{pkr}	ESL	ESR	$I_{rms\ max}$ (*)	Rth	KEMET Internal Part Number	Customer Part Number
										Lead Length 2x 4 mm	at 100 kHz	at 100 kHz, 85°C			
			W	H	L				A_{pk}	nH	mΩ	A_{rms}	(°C/W)		
1,600	650	0.033	6.0	15.0	26.5	22.5	3,000	9,600,000	99	16	19	4.9	43	76TN2330(1)40(2)	R76TN2330(1)40(2)
1,600	650	0.039	7.0	16.0	26.5	22.5	3,000	9,600,000	117	16	16	5.5	41	76TN2390(1)40(2)	R76TN2390(1)40(2)
1,600	650	0.047	7.0	16.0	26.5	22.5	3,000	9,600,000	141	16	14	6.0	41	76TN2470(1)40(2)	R76TN2470(1)40(2)
1,600	650	0.056	8.5	17.0	26.5	22.5	3,000	9,600,000	168	16	23	4.8	38	76TN2560(1)40(2)	R76TN2560(1)40(2)
1,600	650	0.068	10.0	18.5	26.5	22.5	3,000	9,600,000	204	16	19	5.5	36	76TN2680(1)40(2)	R76TN2680(1)40(2)
1,600	650	0.082	10.0	18.5	26.5	22.5	3,000	9,600,000	246	16	16	6.0	36	76TN2820(1)40(2)	R76TN2820(1)40(2)
1,600	650	0.10	11.0	20.0	26.5	22.5	3,000	9,600,000	300	16	13	6.8	34	76TN3100(1)40(2)	R76TN3100(1)40(2)
1,600	650	0.039	9.0	17.0	32.0	27.5	2,000	6,400,000	78	18	41	3.7	35	76TR2390(1)30(2)	R76TR2390(1)30(2)
1,600	650	0.047	9.0	17.0	32.0	27.5	2,000	6,400,000	94	18	34	4.1	35	76TR2470(1)30(2)	R76TR2470(1)30(2)
1,600	650	0.056	9.0	17.0	32.0	27.5	2,000	6,400,000	112	18	43	3.7	35	76TR2560(1)30(2)	R76TR2560(1)30(2)
1,600	650	0.068	9.0	17.0	32.0	27.5	2,000	6,400,000	136	18	35	4.0	35	76TR2680(1)30(2)	R76TR2680(1)30(2)
1,600	650	0.082	11.0	20.0	32.0	27.5	2,000	6,400,000	164	18	29	4.7	31	76TR2820(1)30(2)	R76TR2820(1)30(2)
1,600	650	0.10	11.0	20.0	32.0	27.5	2,000	6,400,000	200	18	24	5.2	31	76TR3100(1)30(2)	R76TR3100(1)30(2)
1,600	650	0.12	13.0	22.0	32.0	27.5	2,000	6,400,000	240	18	27	5.1	29	76TR3120(1)30(2)	R76TR3120(1)30(2)
1,600	650	0.12	24.0	15.0	32.0	27.5	2,000	6,400,000	240	18	27	5.3	27	76TR3120(1)L0(2)	R76TR3120(1)L0(2)
1,600	650	0.15	13.0	25.0	32.0	27.5	2,000	6,400,000	300	18	21	5.8	28	76TR3150(1)40(2)	R76TR3150(1)40(2)
1,600	650	0.15	24.0	15.0	32.0	27.5	2,000	6,400,000	300	18	21	5.9	27	76TR3150(1)L0(2)	R76TR3150(1)L0(2)
1,600	650	0.18	14.0	28.0	32.0	27.5	2,000	6,400,000	360	18	18	6.6	26	76TR3180(1)40(2)	R76TR3180(1)40(2)
1,600	650	0.18	24.0	15.0	32.0	27.5	2,000	6,400,000	360	18	18	6.5	27	76TR3180(1)L0(2)	R76TR3180(1)L0(2)
1,600	650	0.22	18.0	33.0	32.0	27.5	2,000	6,400,000	440	18	14	7.8	23	76TR3220(1)30(2)	R76TR3220(1)30(2)
1,600	650	0.27	18.0	33.0	32.0	27.5	2,000	6,400,000	540	18	15	7.7	23	76TR3270(1)30(2)	R76TR3270(1)30(2)
1,600	650	0.33	18.0	33.0	32.0	27.5	2,000	6,400,000	660	18	12	8.5	23	76TR3330(1)30(2)	R76TR3330(1)30(2)
1,600	650	0.39	22.0	37.0	32.0	27.5	2,000	6,400,000	780	18	16	7.7	21	76TR3390(1)30(2)	R76TR3390(1)30(2)
1,600	650	0.47	22.0	37.0	32.0	27.5	2,000	6,400,000	940	18	14	8.4	21	76TR3470(1)30(2)	R76TR3470(1)30(2)
1,600	650	0.082	11.0	22.0	41.5	37.5	1,200	3,840,000	98	20	29	5.0	27	76TW2820(1)30(2)	R76TW2820(1)30(2)
1,600	650	0.10	11.0	22.0	41.5	37.5	1,200	3,840,000	120	20	24	5.6	27	76TW3100(1)30(2)	R76TW3100(1)30(2)
1,600	650	0.12	11.0	22.0	41.5	37.5	1,200	3,840,000	144	20	27	5.3	27	76TW3120(1)30(2)	R76TW3120(1)30(2)
1,600	650	0.15	11.0	22.0	41.5	37.5	1,200	3,840,000	180	20	21	5.9	27	76TW3150(1)30(2)	R76TW3150(1)30(2)
1,600	650	0.18	13.0	24.0	41.5	37.5	1,200	3,840,000	216	20	18	6.7	25	76TW3180(1)30(2)	R76TW3180(1)30(2)
1,600	650	0.18	24.0	15.0	41.5	37.5	1,200	3,840,000	216	20	18	6.8	24	76TW3180(1)L0(2)	R76TW3180(1)L0(2)
1,600	650	0.22	13.0	24.0	41.5	37.5	1,200	3,840,000	264	20	14	7.4	25	76TW3220(1)30(2)	R76TW3220(1)30(2)
1,600	650	0.22	24.0	15.0	41.5	37.5	1,200	3,840,000	264	20	14	7.5	24	76TW3220(1)L0(2)	R76TW3220(1)L0(2)
1,600	650	0.27	13.0	24.0	41.5	37.5	1,200	3,840,000	324	20	15	7.3	25	76TW3270(1)30(2)	R76TW3270(1)30(2)
1,600	650	0.27	24.0	19.0	41.5	37.5	1,200	3,840,000	324	20	15	7.5	24	76TW3270(1)L0(2)	R76TW3270(1)L0(2)
1,600	650	0.33	16.0	28.5	41.5	37.5	1,200	3,840,000	396	20	12	8.6	23	76TW3330(1)30(2)	R76TW3330(1)30(2)
1,600	650	0.33	24.0	19.0	41.5	37.5	1,200	3,840,000	396	20	12	8.2	24	76TW3330(1)L0(2)	R76TW3330(1)L0(2)
1,600	650	0.39	16.0	28.5	41.5	37.5	1,200	3,840,000	468	20	16	7.4	23	76TW3390(1)30(2)	R76TW3390(1)30(2)
1,600	650	0.47	19.0	32.0	41.5	37.5	1,200	3,840,000	564	20	14	8.5	21	76TW3470(1)30(2)	R76TW3470(1)30(2)
1,600	650	0.56	20.0	40.0	41.5	37.5	1,200	3,840,000	672	20	11	9.7	19	76TW3560(1)30(2)	R76TW3560(1)30(2)
1,600	650	0.68	20.0	40.0	41.5	37.5	1,200	3,840,000	816	20	11	10.1	19	76TW3680(1)30(2)	R76TW3680(1)30(2)
1,600	650	0.82	24.0	44.0	41.5	37.5	1,200	3,840,000	984	20	9	11.5	17	76TW3820(1)30(2)	R76TW3820(1)30(2)
1,600	650	1.0	24.0	44.0	41.5	37.5	1,200	3,840,000	1,200	20	7.2	12.7	17	76TW4100(1)30(2)	R76TW4100(1)30(2)
1,600	650	1.2	30.0	45.0	41.5	37.5	1,200	3,840,000	1,440	20	15.9	8.9	16	76TW4120(1)30(2)	R76TW4120(1)30(2)
2,000	700	0.00010	4.0	10.0	18.0	15.0	11,000	44,000,000	1	10	6,366	0.044	65	76UI0100(1)40(2)	R76UI0100(1)40(2)
2,000	700	0.00012	4.0	10.0	18.0	15.0	11,000	44,000,000	1	10	5,305	0.053	65	76UI0120(1)40(2)	R76UI0120(1)40(2)
2,000	700	0.00015	4.0	10.0	18.0	15.0	11,000	44,000,000	1	10	4,244	0.066	65	76UI0150(1)40(2)	R76UI0150(1)40(2)
2,000	700	0.00018	4.0	10.0	18.0	15.0	11,000	44,000,000	2	10	3,537	0.079	65	76UI0180(1)40(2)	R76UI0180(1)40(2)
2,000	700	0.00022	4.0	10.0	18.0	15.0	11,000	44,000,000	2	10	2,894	0.097	65	76UI0220(1)40(2)	R76UI0220(1)40(2)
2,000	700	0.00022	5.0	11.0	18.0	15.0	11,000	44,000,000	2	10	2,894	0.097	60	76UI0220(1)00(2)	R76UI0220(1)00(2)
2,000	700	0.00027	4.0	10.0	18.0	15.0	11,000	44,000,000	3	10	2,358	0.119	65	76UI0270(1)40(2)	R76UI0270(1)40(2)
2,000	700	0.00027	5.0	11.0	18.0	15.0	11,000	44,000,000	3	10	2,358	0.119	60	76UI0270(1)00(2)	R76UI0270(1)00(2)
VDC	VAC	Cap Value	W	H	L	Lead Spacing (p)	dV/dt (V/µs)	Max K_0 (V^2/µs)	A_{pk}	Lead Length 2x 4 mm	at 100 kHz	at 100 kHz, 85°C	(°C/W)	KEMET Internal Part Number	Customer Part Number
									I_{pkr}	ESL	ESR	$I_{rms\ max}$ (*)	R_{th}		

(1) Insert lead and packaging code. See Ordering Options Table for available options.
(2) H = 2.5% (only for C ≥ 1,000 pF), J = 5%, K = 10%
(*) I_{rms} value that leads to a ΔT of ≈ 20°C in the hot spot > $T_{HS} = T_{AMB} + \Delta T$ = 85°C + 20°C = 105°C

Table 1 – Ratings & Part Number Reference cont.

VDC	VAC	Cap Value (µF)	Dimensions in mm			Lead Spacing (p)	dV/dt (V/µs)	Max K_0 (V^2/µs)	I_{pkr}	ESL Lead Length 2x 4 mm	ESR at 100 kHz	$I_{rms\ max}$ (*) at 100 kHz, 85°C	Rth	KEMET Internal Part Number	Customer Part Number
			W	H	L				A_{pk}	nH	mΩ	A_{rms}	(°C/W)		
2,000	700	0.00033	4.0	10.0	18.0	15.0	11,000	44,000,000	3	10	1,929	0.145	65	76UI0330(1)40(2)	R76UI0330(1)40(2)
2,000	700	0.00033	5.0	11.0	18.0	15.0	11,000	44,000,000	3	10	1,929	0.145	60	76UI0330(1)00(2)	R76UI0330(1)00(2)
2,000	700	0.00039	4.0	10.0	18.0	15.0	11,000	44,000,000	4	10	1,632	0.172	65	76UI0390(1)40(2)	R76UI0390(1)40(2)
2,000	700	0.00039	5.0	11.0	18.0	15.0	11,000	44,000,000	4	10	1,632	0.172	60	76UI0390(1)00(2)	R76UI0390(1)00(2)
2,000	700	0.00047	4.0	10.0	18.0	15.0	9,500	38,000,000	4	10	1,355	0.207	65	76UI0470(1)40(2)	R76UI0470(1)40(2)
2,000	700	0.00047	5.0	11.0	18.0	15.0	9,500	38,000,000	4	10	1,355	0.207	60	76UI0470(1)00(2)	R76UI0470(1)00(2)
2,000	700	0.00056	4.0	10.0	18.0	15.0	9,500	38,000,000	5	10	1,137	0.246	65	76UI0560(1)40(2)	R76UI0560(1)40(2)
2,000	700	0.00056	5.0	11.0	18.0	15.0	9,500	38,000,000	5	10	1,137	0.246	60	76UI0560(1)00(2)	R76UI0560(1)00(2)
2,000	700	0.00068	4.0	10.0	18.0	15.0	9,500	38,000,000	6	10	936	0.299	65	76UI0680(1)40(2)	R76UI0680(1)40(2)
2,000	700	0.00068	5.0	11.0	18.0	15.0	9,500	38,000,000	6	10	936	0.299	60	76UI0680(1)00(2)	R76UI0680(1)00(2)
2,000	700	0.00082	4.0	10.0	18.0	15.0	9,500	38,000,000	8	10	776	0.361	65	76UI0820(1)40(2)	R76UI0820(1)40(2)
2,000	700	0.00082	5.0	11.0	18.0	15.0	9,500	38,000,000	8	10	776	0.361	60	76UI0820(1)00(2)	R76UI0820(1)00(2)
2,000	700	0.0010	4.0	10.0	18.0	15.0	9,500	38,000,000	10	10	637	0.440	65	76UI1100(1)40(2)	R76UI1100(1)40(2)
2,000	700	0.0010	5.0	11.0	18.0	15.0	9,500	38,000,000	10	10	637	0.440	60	76UI1100(1)30(2)	R76UI1100(1)30(2)
2,000	700	0.0012	4.0	10.0	18.0	15.0	9,500	38,000,000	11	10	531	0.53	65	76UI1120(1)40(2)	R76UI1120(1)40(2)
2,000	700	0.0012	5.0	11.0	18.0	15.0	9,500	38,000,000	11	10	531	0.53	60	76UI1120(1)30(2)	R76UI1120(1)30(2)
2,000	700	0.0015	4.0	10.0	18.0	15.0	9,500	38,000,000	14	10	424	0.66	65	76UI1150(1)40(2)	R76UI1150(1)40(2)
2,000	700	0.0015	5.0	11.0	18.0	15.0	9,500	38,000,000	14	10	424	0.66	60	76UI1150(1)30(2)	R76UI1150(1)30(2)
2,000	700	0.0018	4.0	10.0	18.0	15.0	9,500	38,000,000	17	10	354	0.79	65	76UI1180(1)40(2)	R76UI1180(1)40(2)
2,000	700	0.0018	5.0	11.0	18.0	15.0	9,500	38,000,000	17	10	354	0.79	60	76UI1180(1)30(2)	R76UI1180(1)30(2)
2,000	700	0.0022	4.0	10.0	18.0	15.0	9,500	38,000,000	21	10	289	0.97	65	76UI1220(1)40(2)	R76UI1220(1)40(2)
2,000	700	0.0022	5.0	11.0	18.0	15.0	9,500	38,000,000	21	10	289	0.97	60	76UI1220(1)30(2)	R76UI1220(1)30(2)
2,000	700	0.0027	4.0	10.0	18.0	15.0	9,500	38,000,000	26	10	236	1.14	65	76UI1270(1)40(2)	R76UI1270(1)40(2)
2,000	700	0.0027	5.0	11.0	18.0	15.0	9,500	38,000,000	26	10	236	1.19	60	76UI1270(1)30(2)	R76UI1270(1)30(2)
2,000	700	0.0033	5.0	11.0	18.0	15.0	9,500	38,000,000	31	10	193	1.31	60	76UI1330(1)40(2)	R76UI1330(1)40(2)
2,000	700	0.0039	5.0	11.0	18.0	15.0	9,500	38,000,000	37	10	163	1.43	60	76UI1390(1)40(2)	R76UI1390(1)40(2)
2,000	700	0.0047	5.0	11.0	18.0	15.0	9,500	38,000,000	45	10	135	1.57	60	76UI1470(1)40(2)	R76UI1470(1)40(2)
2,000	700	0.0056	6.0	12.0	18.0	15.0	9,500	38,000,000	53	10	114	1.77	56	76UI1560(1)40(2)	R76UI1560(1)40(2)
2,000	700	0.0068	6.0	12.0	18.0	15.0	9,500	38,000,000	65	10	94	1.95	56	76UI1680(1)40(2)	R76UI1680(1)40(2)
2,000	700	0.0082	6.0	12.0	18.0	15.0	9,500	38,000,000	78	10	78	2.15	56	76UI1820(1)40(2)	R76UI1820(1)40(2)
2,000	700	0.010	7.5	13.5	18.0	15.0	9,500	38,000,000	95	10	64	2.49	51	76UI2100(1)40(2)	R76UI2100(1)40(2)
2,000	700	0.010	13.0	12.0	18.0	15.0	9,500	38,000,000	95	10	64	2.65	45	76UI2100(1)70(2)	R76UI2100(1)70(2)
2,000	700	0.012	8.5	14.5	18.0	15.0	9,500	38,000,000	114	10	53	2.81	48	76UI2120(1)40(2)	R76UI2120(1)40(2)
2,000	700	0.015	8.5	14.5	18.0	15.0	9,500	38,000,000	143	10	42	3.14	48	76UI2150(1)40(2)	R76UI2150(1)40(2)
2,000	700	0.0010	6.0	15.0	26.5	22.5	4,500	18,000,000	4	16	637	0.44	43	76UN1100(1)00(2)	R76UN1100(1)00(2)
2,000	700	0.0012	6.0	15.0	26.5	22.5	4,500	18,000,000	4	16	531	0.53	43	76UN1120(1)00(2)	R76UN1120(1)00(2)
2,000	700	0.0015	6.0	15.0	26.5	22.5	4,500	18,000,000	5	16	424	0.66	43	76UN1150(1)00(2)	R76UN1150(1)00(2)
2,000	700	0.0018	6.0	15.0	26.5	22.5	4,500	18,000,000	6	16	354	0.79	43	76UN1180(1)00(2)	R76UN1180(1)00(2)
2,000	700	0.0022	6.0	15.0	26.5	22.5	4,500	18,000,000	8	16	289	0.97	43	76UN1220(1)00(2)	R76UN1220(1)00(2)
2,000	700	0.0027	6.0	15.0	26.5	22.5	4,500	18,000,000	9	16	236	1.19	43	76UN1270(1)00(2)	R76UN1270(1)00(2)
2,000	700	0.0033	6.0	15.0	26.5	22.5	4,500	18,000,000	12	16	193	1.45	43	76UN1330(1)00(2)	R76UN1330(1)00(2)
2,000	700	0.0039	6.0	15.0	26.5	22.5	4,500	18,000,000	14	16	163	1.68	43	76UN1390(1)00(2)	R76UN1390(1)00(2)
2,000	700	0.0047	6.0	15.0	26.5	22.5	4,500	18,000,000	16	16	135	1.84	43	76UN1470(1)00(2)	R76UN1470(1)00(2)
2,000	700	0.0056	6.0	15.0	26.5	22.5	4,500	18,000,000	20	16	114	2.01	43	76UN1560(1)00(2)	R76UN1560(1)00(2)
2,000	700	0.0068	6.0	15.0	26.5	22.5	4,500	18,000,000	24	16	94	2.22	43	76UN1680(1)00(2)	R76UN1680(1)00(2)
2,000	700	0.0082	6.0	15.0	26.5	22.5	4,500	18,000,000	29	16	78	2.44	43	76UN1820(1)30(2)	R76UN1820(1)30(2)
2,000	700	0.010	6.0	15.0	26.5	22.5	4,500	18,000,000	35	16	64	2.69	43	76UN2100(1)30(2)	R76UN2100(1)30(2)
2,000	700	0.012	6.0	15.0	26.5	22.5	4,500	18,000,000	42	16	53	2.95	43	76UN2120(1)30(2)	R76UN2120(1)30(2)
2,000	700	0.015	6.0	15.0	26.5	22.5	4,500	18,000,000	53	16	42	3.29	43	76UN2150(1)40(2)	R76UN2150(1)40(2)
2,000	700	0.018	6.0	15.0	26.5	22.5	4,500	18,000,000	63	16	35	3.61	43	76UN2180(1)40(2)	R76UN2180(1)40(2)
2,000	700	0.022	7.0	16.0	26.5	22.5	4,500	18,000,000	77	16	29	4.1	41	76UN2220(1)40(2)	R76UN2220(1)40(2)
VDC	VAC	Cap Value	W	H	L	Lead Spacing (p)	dV/dt (V/µs)	Max K_0 (V^2/µs)	A_{pk}	Lead Length 2x 4 mm	at 100 kHz	at 100 kHz, 85°C	(°C/W)	KEMET Internal Part Number	Customer Part Number
									I_{pkr}	ESL	ESR	$I_{rms\ max}$ (*)	R_{th}		

(1) Insert lead and packaging code. See Ordering Options Table for available options.
(2) H = 2.5% (only for C ≥ 1,000 pF), J = 5%, K = 10%
(*) I_{rms} value that leads to a ΔT of ≈ 20°C in the hot spot > $T_{HS} = T_{AMB} + \Delta T$ = 85°C + 20°C = 105°C

Table 1 – Ratings & Part Number Reference cont.

VDC	VAC	Cap Value (µF)	Dimensions in mm			Lead Spacing (p)	dV/dt (V/µs)	Max K_0 (V^2/µs)	I_{pkr}	ESL Lead Length 2x 4 mm	ESR at 100 kHz	$I_{rms\ max}$ (*) at 100 kHz, 85°C	Rth	KEMET Internal Part Number	Customer Part Number
			W	H	L				A_{pk}	nH	mΩ	A_{rms}	(°C/W)		
2,000	700	0.027	7.0	16.0	26.5	22.5	4,500	18,000,000	95	16	24	4.5	41	76UN2270(1)40(2)	R76UN2270(1)40(2)
2,000	700	0.033	8.5	17.0	26.5	22.5	4,500	18,000,000	116	16	19	5.2	38	76UN2330(1)40(2)	R76UN2330(1)40(2)
2,000	700	0.039	10.0	18.5	26.5	22.5	4,500	18,000,000	137	16	16	5.9	36	76UN2390(1)40(2)	R76UN2390(1)40(2)
2,000	700	0.047	10.0	18.5	26.5	22.5	4,500	18,000,000	165	16	14	6.4	36	76UN2470(1)40(2)	R76UN2470(1)40(2)
2,000	700	0.056	11.0	20.0	26.5	22.5	4,500	18,000,000	196	16	23	5.1	34	76UN2560(1)40(2)	R76UN2560(1)40(2)
2,000	700	0.022	9.0	17.0	32.0	27.5	2,500	10,000,000	51	18	72	2.8	35	76UR2220(1)30(2)	R76UR2220(1)30(2)
2,000	700	0.027	9.0	17.0	32.0	27.5	2,500	10,000,000	62	18	59	3.1	35	76UR2270(1)30(2)	R76UR2270(1)30(2)
2,000	700	0.033	9.0	17.0	32.0	27.5	2,500	10,000,000	76	18	48	3.4	35	76UR2330(1)30(2)	R76UR2330(1)30(2)
2,000	700	0.039	11.0	20.0	32.0	27.5	2,500	10,000,000	90	18	41	4.0	31	76UR2390(1)20(2)	R76UR2390(1)20(2)
2,000	700	0.047	11.0	20.0	32.0	27.5	2,500	10,000,000	108	18	34	4.3	31	76UR2470(1)30(2)	R76UR2470(1)30(2)
2,000	700	0.047	24.0	15.0	32.0	27.5	2,500	10,000,000	108	18	34	4.7	27	76UR2470(1)L0(2)	R76UR2470(1)L0(2)
2,000	700	0.056	13.0	22.0	32.0	27.5	2,500	10,000,000	129	18	43	4.0	29	76UR2560(1)30(2)	R76UR2560(1)30(2)
2,000	700	0.056	24.0	15.0	32.0	27.5	2,500	10,000,000	129	18	43	4.2	27	76UR2560(1)L0(2)	R76UR2560(1)L0(2)
2,000	700	0.068	13.0	22.0	32.0	27.5	2,500	10,000,000	156	18	35	4.4	29	76UR2680(1)30(2)	R76UR2680(1)30(2)
2,000	700	0.068	24.0	15.0	32.0	27.5	2,500	10,000,000	156	18	35	4.6	27	76UR2680(1)L0(2)	R76UR2680(1)L0(2)
2,000	700	0.082	13.0	25.0	32.0	27.5	2,500	10,000,000	189	18	29	5.0	28	76UR2820(1)40(2)	R76UR2820(1)40(2)
2,000	700	0.082	24.0	15.0	32.0	27.5	2,500	10,000,000	189	18	29	5.0	27	76UR2820(1)L0(2)	R76UR2820(1)L0(2)
2,000	700	0.10	14.0	28.0	32.0	27.5	2,500	10,000,000	230	18	24	5.7	26	76UR3100(1)30(2)	R76UR3100(1)30(2)
2,000	700	0.12	18.0	33.0	32.0	27.5	2,500	10,000,000	276	18	27	5.7	23	76UR3120(1)30(2)	R76UR3120(1)30(2)
2,000	700	0.15	18.0	33.0	32.0	27.5	2,500	10,000,000	345	18	21	6.4	23	76UR3150(1)30(2)	R76UR3150(1)30(2)
2,000	700	0.18	22.0	37.0	32.0	27.5	2,500	10,000,000	414	18	18	7.4	21	76UR3180(1)30(2)	R76UR3180(1)30(2)
2,000	700	0.22	22.0	37.0	32.0	27.5	2,500	10,000,000	506	18	14	8.2	21	76UR3220(1)30(2)	R76UR3220(1)30(2)
2,000	700	0.033	11.0	22.0	41.5	37.5	1,500	6,000,000	50	20	48	3.9	27	76UW2330(1)30(2)	R76UW2330(1)30(2)
2,000	700	0.039	11.0	22.0	41.5	37.5	1,500	6,000,000	59	20	41	4.3	27	76UW2390(1)30(2)	R76UW2390(1)30(2)
2,000	700	0.047	11.0	22.0	41.5	37.5	1,500	6,000,000	71	20	34	4.7	27	76UW2470(1)30(2)	R76UW2470(1)30(2)
2,000	700	0.056	11.0	22.0	41.5	37.5	1,500	6,000,000	84	20	43	4.2	27	76UW2560(1)30(2)	R76UW2560(1)30(2)
2,000	700	0.068	11.0	22.0	41.5	37.5	1,500	6,000,000	102	20	35	4.6	27	76UW2680(1)30(2)	R76UW2680(1)30(2)
2,000	700	0.082	11.0	22.0	41.5	37.5	1,500	6,000,000	123	20	29	5.0	27	76UW2820(1)30(2)	R76UW2820(1)30(2)
2,000	700	0.082	24.0	15.0	41.5	37.5	1,500	6,000,000	123	20	29	5.3	24	76UW2820(1)L0(2)	R76UW2820(1)L0(2)
2,000	700	0.10	13.0	24.0	41.5	37.5	1,500	6,000,000	150	20	24	5.8	25	76UW3100(1)30(2)	R76UW3100(1)30(2)
2,000	700	0.10	24.0	15.0	41.5	37.5	1,500	6,000,000	150	20	24	5.9	24	76UW3100(1)L0(2)	R76UW3100(1)L0(2)
2,000	700	0.12	13.0	24.0	41.5	37.5	1,500	6,000,000	180	20	27	5.5	25	76UW3120(1)30(2)	R76UW3120(1)30(2)
2,000	700	0.12	24.0	15.0	41.5	37.5	1,500	6,000,000	180	20	27	5.6	24	76UW3120(1)L0(2)	R76UW3120(1)L0(2)
2,000	700	0.15	16.0	28.5	41.5	37.5	1,500	6,000,000	225	20	21	6.5	23	76UW3150(1)30(2)	R76UW3150(1)30(2)
2,000	700	0.15	24.0	19.0	41.5	37.5	1,500	6,000,000	225	20	21	6.4	23	76UW3150(1)L0(2)	R76UW3150(1)L0(2)
2,000	700	0.18	16.0	28.5	41.5	37.5	1,500	6,000,000	270	20	18	7.1	23	76UW3180(1)30(2)	R76UW3180(1)30(2)
2,000	700	0.18	24.0	19.0	41.5	37.5	1,500	6,000,000	270	20	18	7.0	23	76UW3180(1)L0(2)	R76UW3180(1)L0(2)
2,000	700	0.22	19.0	32.0	41.5	37.5	1,500	6,000,000	330	20	14	8.2	21	76UW3220(1)30(2)	R76UW3220(1)30(2)
2,000	700	0.27	20.0	40.0	41.5	37.5	1,500	6,000,000	405	20	15	8.5	19	76UW3270(1)30(2)	R76UW3270(1)30(2)
2,000	700	0.33	20.0	40.0	41.5	37.5	1,500	6,000,000	495	20	12	9.4	19	76UW3330(1)30(2)	R76UW3330(1)30(2)
2,000	700	0.39	24.0	44.0	41.5	37.5	1,500	6,000,000	585	20	16	8.4	17	76UW3390(1)30(2)	R76UW3390(1)30(2)
2,000	700	0.47	24.0	44.0	41.5	37.5	1,500	6,000,000	705	20	14	9.3	17	76UW3470(1)30(2)	R76UW3470(1)30(2)
2,000	700	0.56	30.0	45.0	41.5	37.5	1,500	6,000,000	840	20	11	10.5	16	76UW3560(1)30(2)	R76UW3560(1)30(2)
VDC	VAC	Cap Value	W	H	L	Lead Spacing (p)	dV/dt (V/µs)	Max K_0 (V^2/µs)	A_{pk} / I_{pkr}	Lead Length 2x 4 mm / ESL	at 100 kHz / ESR	at 100 kHz, 85°C / $I_{rms\ max}$ (*)	(°C/W) / R_{th}	KEMET Internal Part Number	Customer Part Number

(1) Insert lead and packaging code. See Ordering Options Table for available options.
(2) H = 2.5% (only for C ≥ 1,000 pF), J = 5%, K = 10%
(*) I_{rms} value that leads to a ΔT of ≈ 20°C in the hot spot > $T_{HS} = T_{AMB} + \Delta T$ = 85°C + 20°C = 105°C

Soldering Process

The implementation of the RoHS directive has resulted in the selection of SnAgCu (SAC) alloys or SnCu alloys as primary solder. This has increased the liquidus temperature from that of 183°C for SnPb eutectic alloy to 217 – 221°C for the new alloys. As a result, the heat stress to the components, even in wave soldering, has increased considerably due to higher pre-heat and wave temperatures. Polypropylene capacitors are especially sensitive to heat (the melting point of polypropylene is 160 – 170°C). Wave soldering can be destructive, especially for mechanically small polypropylene capacitors (with lead spacing of 5 mm to 15 mm), and great care has to be taken during soldering. The recommended solder profiles from KEMET should be used. Please consult KEMET with any questions. In general, the wave soldering curve from IEC Publication 61760–1 Edition 2 serves as a solid guideline for successful soldering. Please see Figure 1.

Reflow soldering is not recommended for through-hole film capacitors. Exposing capacitors to a soldering profile in excess of the above recommended limits may result in degradation or permanent damage to the capacitors.

Do not place the polypropylene capacitor through an adhesive curing oven to cure resin for surface mount components. Insert through-hole parts after the curing of surface mount parts. Consult KEMET to discuss the actual temperature profile in the oven, if through-hole components must pass through the adhesive curing process. A maximum two soldering cycles is recommended. Please allow time for the capacitor surface temperature to return to a normal temperature before the second soldering cycle.

Manual Soldering Recommendations

Following is the recommendation for manual soldering with a soldering iron.

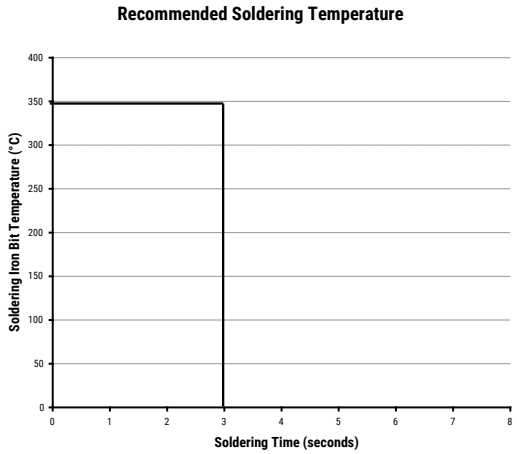

The soldering iron tip temperature should be set at 350°C (+10°C maximum) with the soldering duration not to exceed more than 3 seconds.

Wave Soldering Recommendations

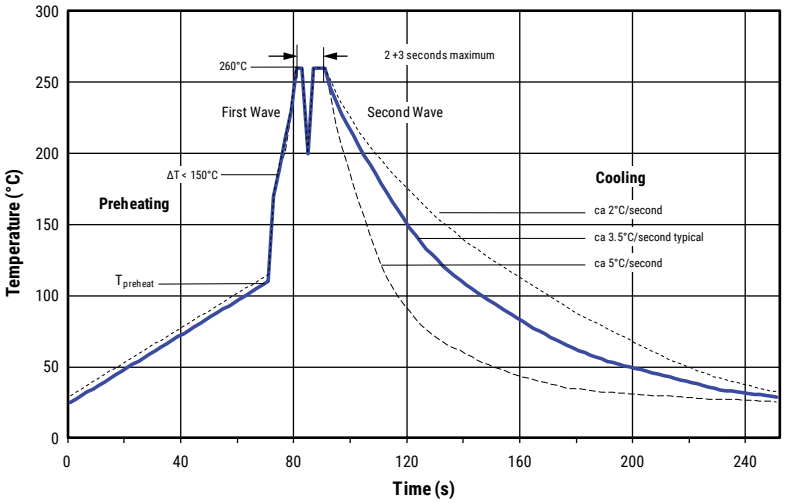

Soldering Process cont.

Wave Soldering Recommendations cont.

1. The table indicates the maximum set-up temperature of the soldering process

Figure 1

Film Material	Maximum Preheat Temperature			Maximum Peak Soldering Temperature	
	Capacitor Pitch ≤ 10 mm	Capacitor Pitch = 15 mm	Capacitor Pitch > 15 mm	Capacitor Pitch ≤ 15 mm	Capacitor Pitch > 15 mm
Double Metallized Polystyrene and Single Metallized Polypropylene	110°C	110°C	130°C	260°C	270°C

2. The maximum temperature measured on the capacitor body:
   Set the temperature so that the maximum temperature is below the limit:

Film Material	Maximum Temperature Measured on the Capacitor Body
Double Metallized Polystyrene and Single Metallized Polypropylene	120°C (for series R76) 125°C (for series R76 125°)

Duration: < 60 seconds

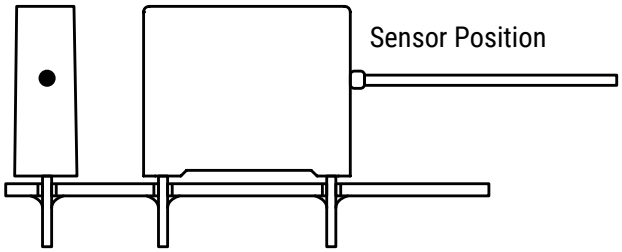

Selective Soldering Recommendations

Selective dip soldering is a variation of reflow soldering. In this method, the printed circuit board with through-hole components to be soldered is preheated and transported over the solder bath as in normal flow soldering without touching the solder. When the board is over the bath, it is stopped and pre-designed solder pots are lifted from the bath with molten solder only at the places of the selected components, and pressed against the lower surface of the board to solder the components.

The temperature profile for selective soldering is similar to the double wave flow soldering outlined in this document, **however, instead of two baths, there is only one bath with a time from 3 to 10 seconds.** In selective soldering, the risk of overheating is greater than in double wave flow soldering, and great care must be taken so that the parts are not overheated.

Construction

1 Section

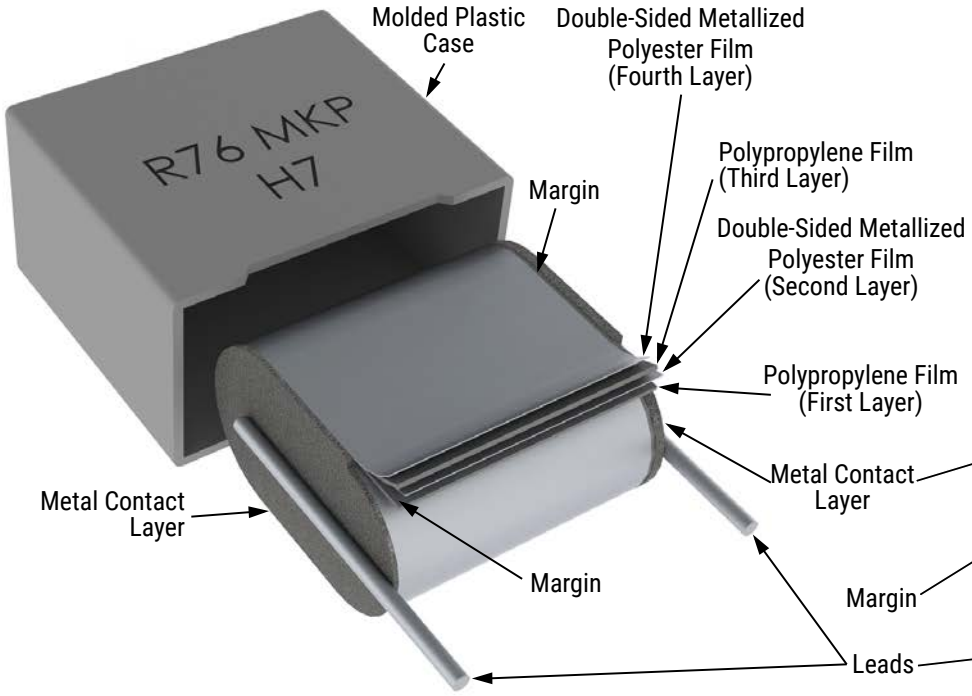

Detailed Cross Section

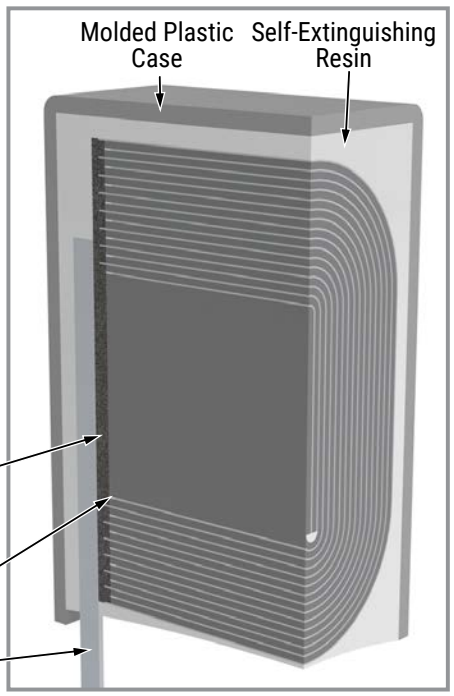

Winding Schemes

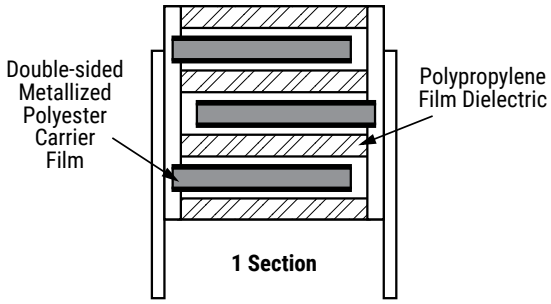

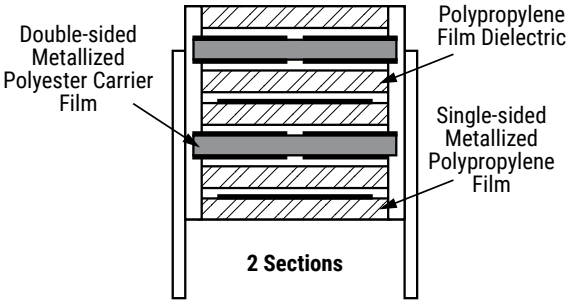

Marking

Pitch – 7.5, 10, 15, & 22.5

Marking Variants*

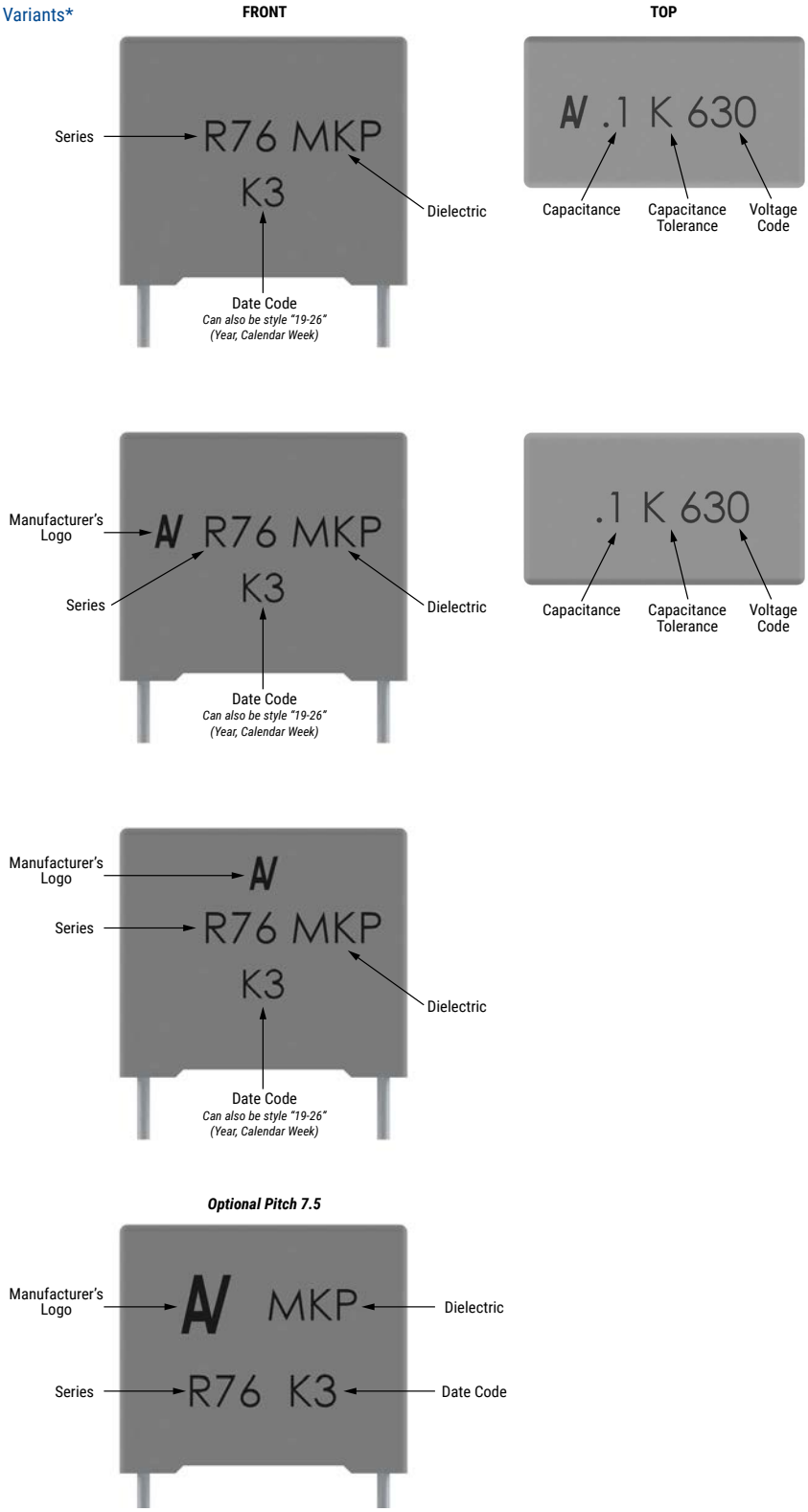

**Differences are caused by technology (clichee, laser, or ink) and technic (production line)*

Marking cont.

Pitch – 7.5, 10, 15, 22.5, 27.5, & 37.5

Marking Variants*

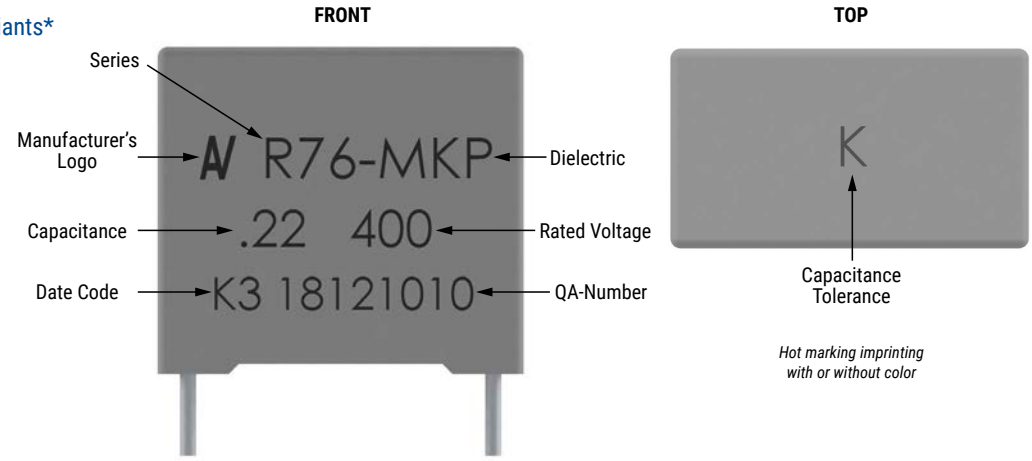

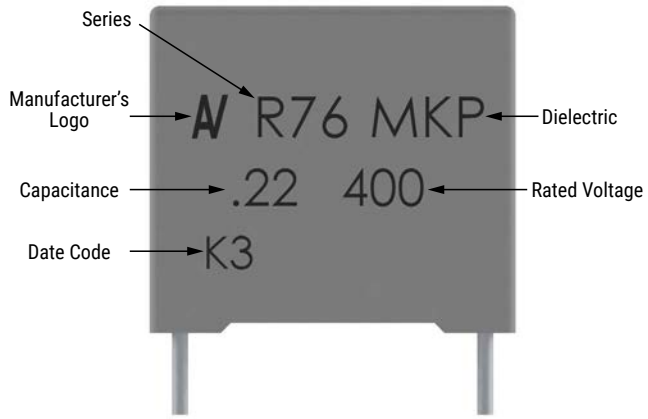

Pitch – 22.5, 27.5, & 37.5

Marking Variants*

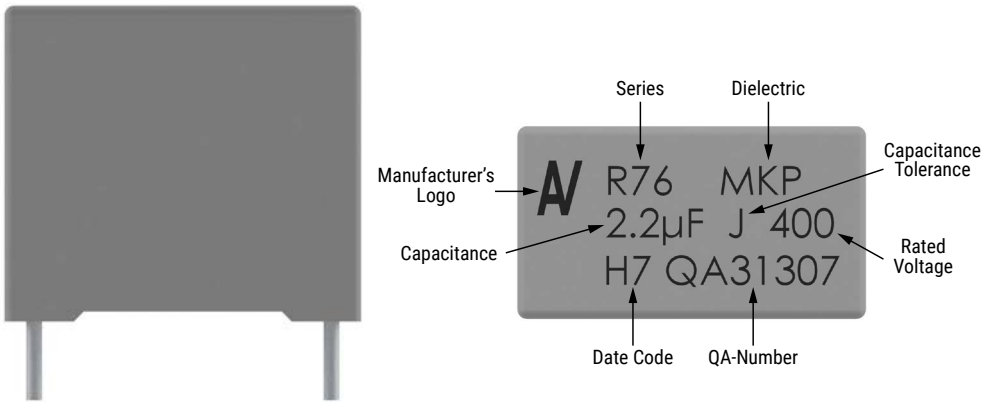

** Differences are caused by technology (clichee, laser, or ink) and technic (production line)*

Packaging Quantities

Lead Spacing	Thickness (mm)	Height (mm)	Length (mm)	Bulk Short Leads	Bulk Long Leads		Standard Reel ø 355 mm	Large Reel ø 500 mm	Ammo Taped
	Lead and Packaging Code			JA - JB JE - JH - SE	Z3[1] - JM[2]	40 - 50	GY - CK[1]	CK	DQ
7.5	3.0	8.0	10.0	1,500	1,750	-	2,100	-	2,800
	4.0	9.0	10.0	2,000	1,500	-	1,500	-	2,100
	5.0	10.5	10.0	1,500	1,000	-	1,200	-	1,600
	6.0	12.0	10.5	1,000	800	-	1,000	-	1,350
10	4.0	9.0	13.0	2,000	2,200	1,800	750	1,500	1,000
	5.0	11.0	13.0	1,300	2,000	1,500	600	1,250	800
	6.0	12.0	13.0	1,000	1,800	1,200	500	1,000	680
15	4.0	10.0	18.0	2,500	1,500	1,500	750	1,500	1,000
	5.0	11.0	18.0	2,000	1,250	1,000	600	1,250	800
	6.0	12.0	18.0	1,750	1,000	900	500	1,000	680
	7.5	13.5	18.0	1,000	800	700	350	800	500
	8.5	14.5	18.0	1,000	650	500	300	700	440
	9.0	12.5	18.0	1,000	700	520	270	650	410
	10.0	16.0	18.0	750	550	500	270	600	380
	11.0	19.0	18.0	450	400	350	270	500	340
	13.0	12.0	18.0	750	520	490	200	480	280
22.5	6.0	15.0	26.5	805	450	500	300	700	464
	7.0	16.0	26.5	700	450	500	250	550	380
	8.5	17.0	26.5	468	350	300	250	450	280
	10.0	18.5	26.5	396	350	300	160	350	235
	11.0	20.0	26.5	360	200	250	190	350	217
	13.0	22.0	26.5	300	150	200	130	300	-
27.5	9.0	17.0	32.0	816	-	408	230	450	-
	11.0	20.0	32.0	560	-	336	190	350	-
	13.0	12.0	32.0	672	-	288	-	-	-
	13.0	22.0	32.0	480	-	288	150	300	-
	13.0	25.0	32.0	480	-	288	-	300	-
	14.0	28.0	32.0	352	-	176	-	-	-
	18.0	33.0	32.0	256	-	128	-	-	-
	22.0	37.0	32.0	168	-	112	-	-	-
	24.0	15.0	32.0	336	-	144	-	-	-
37.5	11.0	22.0	41.5	420	-	252	-	-	-
	13.0	24.0	41.5	360	-	216	-	-	-
	16.0	28.5	41.5	216	-	108	-	-	-
	19.0	32.0	41.5	192	-	96	-	-	-
	20.0	40.0	41.5	126	-	84	-	-	-
	24.0	15.0	41.5	252	-	108	-	-	-
	24.0	19.0	41.5	216	-	108	-	-	-
	24.0	44.0	41.5	108	-	72	-	-	-
	30.0	45.0	41.5	90	-	60	-	-	-

1 Only for 7.5 mm lead spacing.
2 Only for > 7.5 mm lead spacing.

Lead Taping & Packaging (IEC 60286–2)

Figure 1 — Lead Spacing 7.5 mm

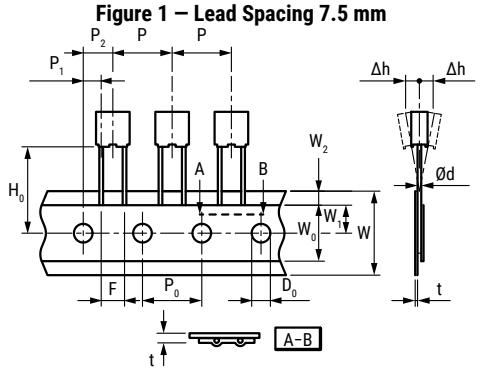

Lead Spacing 10 & 15 mm

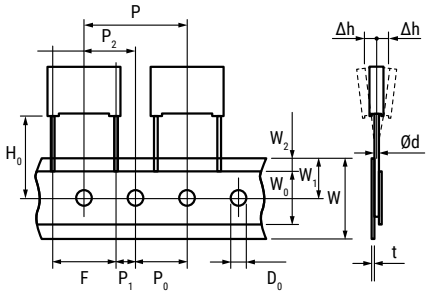

Lead Spacing 22.5 & 27.5 mm

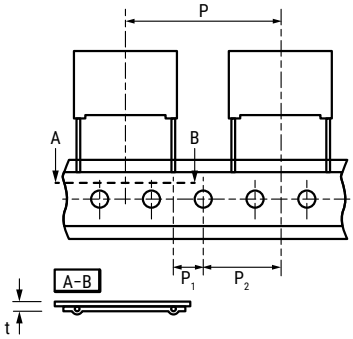

Taping Specification

Description	Symbol	Dimensions (mm)					
		Lead Spacing					Tolerance
		7.5	10.0	15.0	22.5	27.5	
Lead wire diameter	d	0.5 – 0.6	0.6	0.6 – 0.8	0.8	0.8	±0.05
Taping lead space	P	12.7	25.4	25.4	38.1	38.1	±1
Feed hole lead space *	P_0	12.7	12.7	12.7	12.7	12.7	±0.2 **
Centering of the lead wire	P_1	2.6	7.7	5.2	7.8	5.3	±0.7
Centering of the body	P_2	6.35	12.7	12.7	19.05	19.05	±1.3
Lead spacing ***	F	7.5	10.0	15.0	22.5	27.5	+0.6/−0.1
Component alignment	Δh	0	0	0	0	0	±2
Component deviation	Δp	0	0	0	0	0	±1
Height of component from tape center	H_0****	18.5	18.5	18.5	18.5	18.5	±0.5
Carrier tape width	W	18	18	18	18	18	+1/−0.5
Hold down tape width	W_0	6	9	10	10	10	Minimum
Hole position	W_1	9	9	9	9	9	±0.5
Hold down tape position	W_2	3	3	3	3	3	Maximum
Feed hole diameter	D_0	4	4	4	4	4	±0.2
Total Tape thickness	t	0.7	0.7	0.7	0.7	0.7	±0.2

** Available also 15 mm.*
*** Maximum 1 mm on 20 lead spacing.*
**** 15 mm and 10 mm taped to 7.5 mm (crimped leads) available upon request.*
***** H_0 = 16.5 mm is available upon request.*

Lead Taping & Packaging (IEC 60286–2) cont.

Ammo Specifications

Dimensions (mm)		
H	W	T
360	340	59

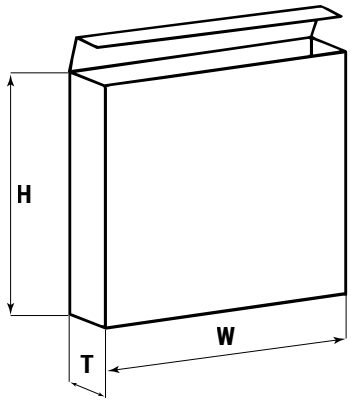

Reel Specifications

Dimensions (mm)		
D	H	W
355 500	30 25	55 Maximum

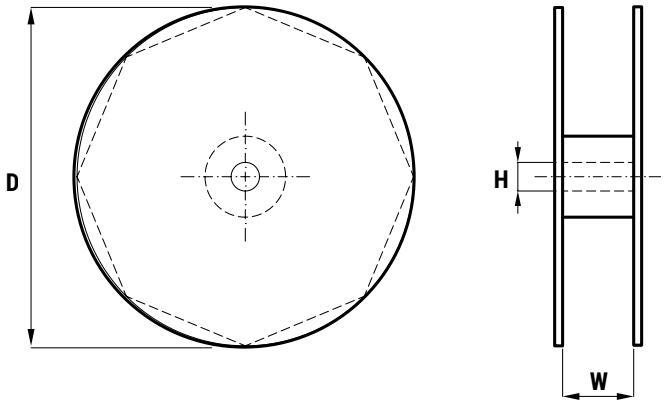

Manufacturing Date Code (IEC–60062)

Y = Year, Z = Month			
Year	Code	Month	Code
2010	A	January	1
2011	B	February	2
2012	C	March	3
2013	D	April	4
2014	E	May	5
2015	F	June	6
2016	H	July	7
2017	J	August	8
2018	K	September	9
2019	L	October	O
2020	M	November	N
2021	N	December	D
2022	P		
2023	R		
2024	S		
2025	T		
2026	U		
2027	V		
2028	W		
2029	X		
2030	A		

KEMET Electronics Corporation Sales Offices

For a complete list of our global sales offices, please visit www.kemet.com/sales.

Disclaimer

All product specifications, statements, information and data (collectively, the "Information") in this datasheet are subject to change. The customer is responsible for checking and verifying the extent to which the Information contained in this publication is applicable to an order at the time the order is placed. All Information given herein is believed to be accurate and reliable, but it is presented without guarantee, warranty, or responsibility of any kind, expressed or implied.

Statements of suitability for certain applications are based on KEMET Electronics Corporation's ("KEMET") knowledge of typical operating conditions for such applications, but are not intended to constitute – and KEMET specifically disclaims – any warranty concerning suitability for a specific customer application or use. The Information is intended for use only by customers who have the requisite experience and capability to determine the correct products for their application. Any technical advice inferred from this Information or otherwise provided by KEMET with reference to the use of KEMET's products is given gratis, and KEMET assumes no obligation or liability for the advice given or results obtained.

Although KEMET designs and manufactures its products to the most stringent quality and safety standards, given the current state of the art, isolated component failures may still occur. Accordingly, customer applications which require a high degree of reliability or safety should employ suitable designs or other safeguards (such as installation of protective circuitry or redundancies) in order to ensure that the failure of an electrical component does not result in a risk of personal injury or property damage.

Although all product–related warnings, cautions and notes must be observed, the customer should not assume that all safety measures are indicted or that other measures may not be required.

KEMET is a registered trademark of KEMET Electronics Corporation.