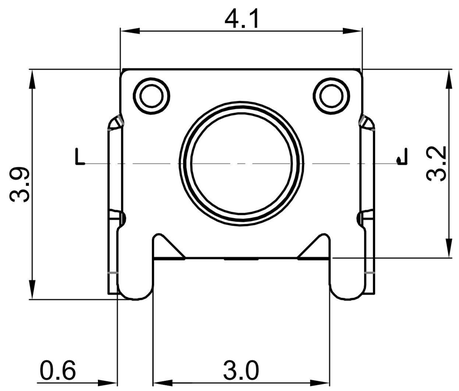

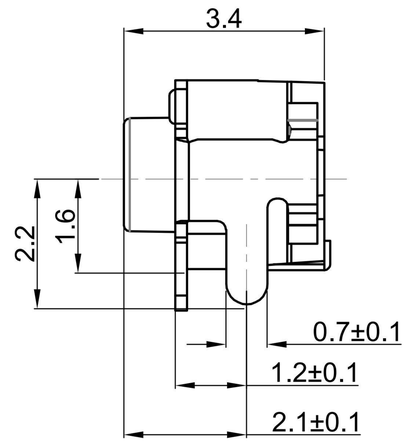

Circuit Diagram

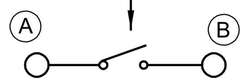

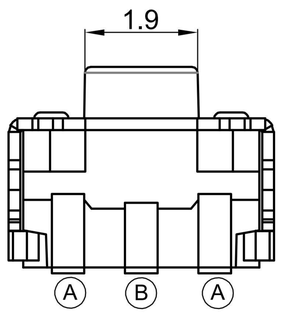

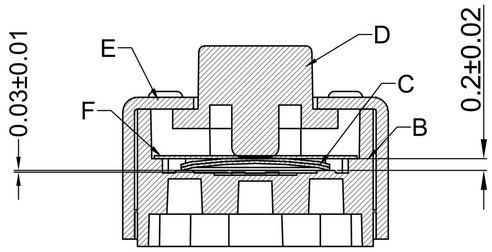

SECTION A-A

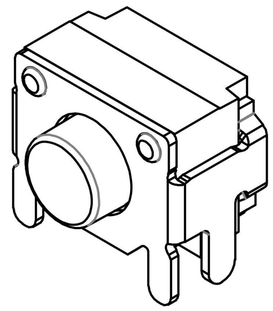

GT-TA108X-HXXX-LX

Operating Force
A=160gf
B=250gf

Switch Height
H034=3.4mm

Switch lifetime (Force)
L1=100,000 Cycles
L2=200,000 Cycles

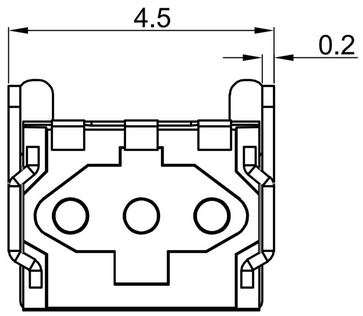

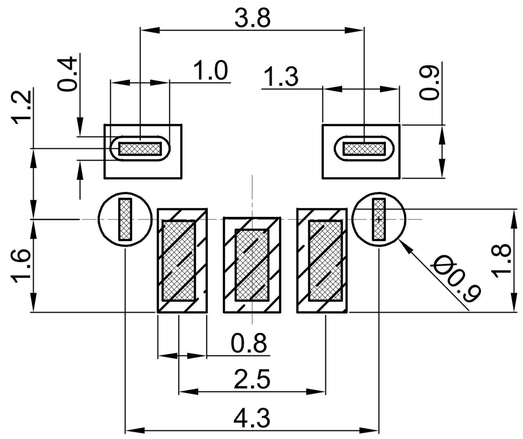

G-Switch Specification:

1.Operating temperature range:-40℃to+85℃
2.Rating:50mA.12V DC
3.Insulation resistance:100MΩ min.100V DC
4.Dielectric strength: 250V AC for 1 min
5.Contact Resistance:100m Ω max.
6.Travel: 0.2±0.05mm

NO.	PART NAME	MATERIAL	REMARK
A	TERMINAL	COPPER ALLOY	Ag PLATING
B	HOUSING	HIGH TEMPERATURE PLASTIC	BLACK
C	SPRING	STAINLESS STEEL	Ag PLATING ONE SIDE
D	PLASTIC BUTTON	HIGH TEMPERATURE PLASTIC	WHITE
E	COVER PLATE	COPPER ALLOY	Ag PLATING
H	YELLOW MEMBRANE	HIGH TEMPERATURE PLASTIC	YELLOW

Pb Process Capable

RoHS Compliant 2002/95/EC

HALOGEN Compliant Halogen Free

SCALE: 6.6:1	UNIT: mm	Title: Horizontal Tact Switch SMT 4.1×3.2×3.4mm CH=1.6mm			
SIZE: A4					
Unless otherwise General Tolerance: X. ±0.30, X.x ±0.20, X.xx ±0.15, X.xxx ±0.10, Angles ±3°		Molde Code: GT-TA108X-HXXX-LX			
		DRAWN	CHECKED	APPROVED	DATE
		Xia	Chen	Chen	2023.02.03

品赞科技 b-Switch ®

REV: A0 SHEET: 1/1