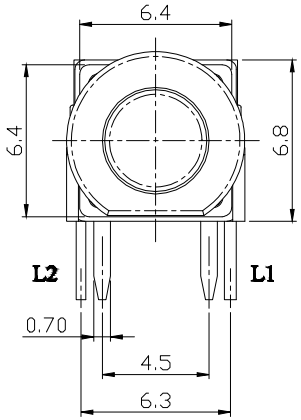

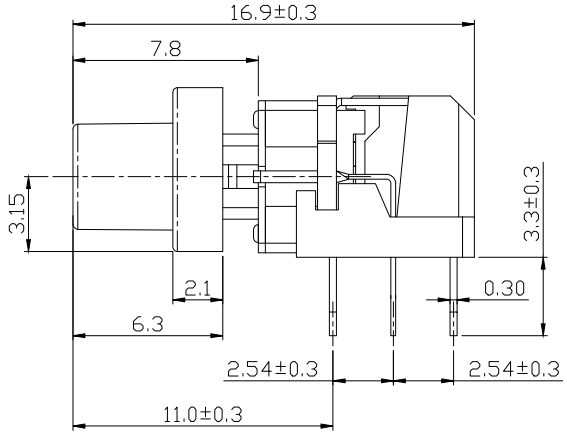

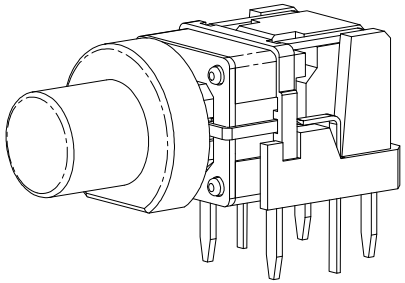

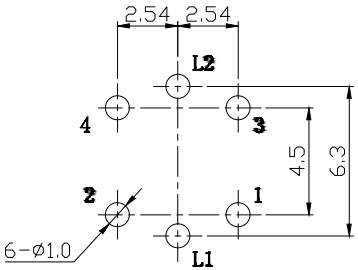

P.C.B LAYOUT

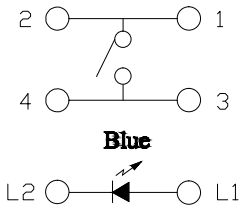

ELECTRICAL DIAGRAM

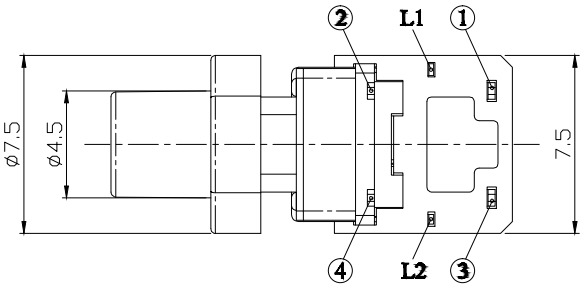

NOTE:
Electrical Characteristics:
Rating: 50mA 12V DC
Contact Resistance: 100mΩ max.(Initial)
Insulation Resistance: 100MΩ min.(at 250V DC)
Dielectric Strength: 250VAC for 1 minute
Led current : 20mA max
Mechanical Characteristics:
Operating Pressure:160gf ±50gf
Operating Stroke:0.25±0.1mm
Operating Life: 100,000 cycles min.
Operating Temperature: -20°C~70°C
Relative Air Humidity:45%～85%

NO.	PART NAME	MATERIAL	QTY.	FINISHING
1	CAP	PC	1	
2	BUTTON	PA66	1	
3	BASE	PA66	1	
4	TERMINAL	H65(C2680)	4	Ag PLATED
5	LED	GaASP/GaP	1	
6	COVER	PET	1	
7	HOLDER	PA66	1	
8	CONTACT	STAINLESS STEEL METAL	1	

LED COLOR (X)										
1	2	3	4	5	6	23	13	12	52	··
Red	Yellow	Green	Blue	White	Pure Green	Yellow Green	Red Green	Red Yellow	White Yellow	··

TOLERANGE			
UNLESS OTHERWISE STATED			
X.X	±0.25	∠	±1°
X.XX	±0.10	UNIT	mm

A 1	增加开关的环境参数	2020.12.23	
版本 VER	变更说明 CHANGE DESCRIPTION	日期 DATE	ECN NO.

D·SWITCH
东莞市德崧电子有限公司
D-SWITCH ELECTRONICS CO.,LTD

版本 VERSION	A1	比例尺 SCALE	1:1	日期 DATE	2020.12.23	品名 TITLE		图号 DRAWING NO	
核准 APPROVED BY		核对 CHECKED BY		绘图 DRAWN BY	孙成	PB02-5H1RFEL-4C		PB02-5H1RFEL-4C_A0	

File Code:DS-WI-E-03_A0