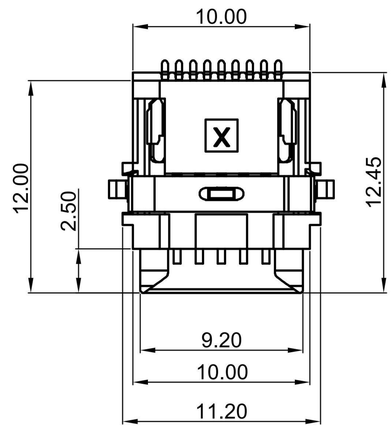


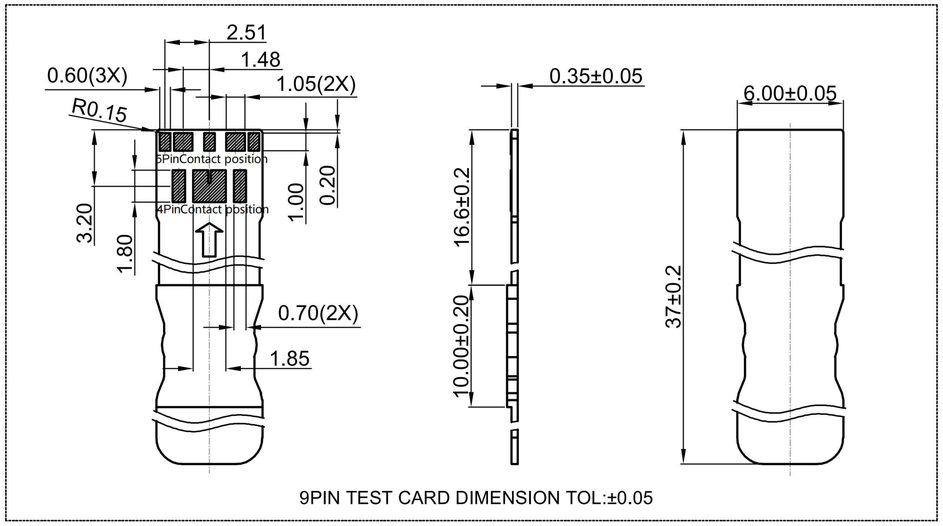


9PIN TEST CARD DIMENSION TOL:±0.05

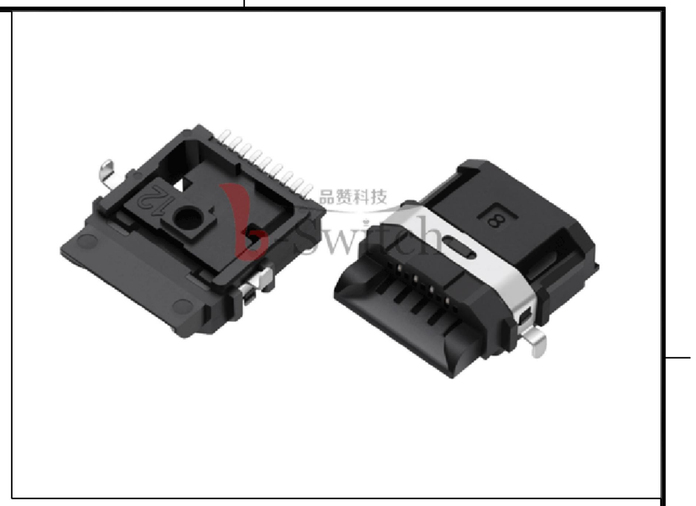

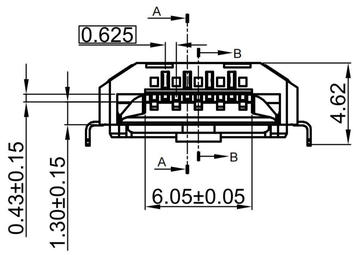


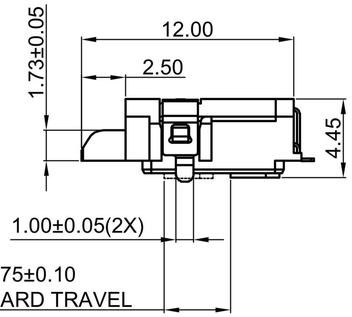


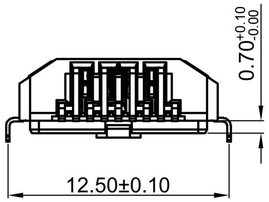


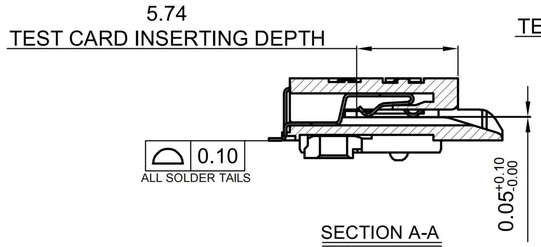


SECTION A-A
SCALE:1:1

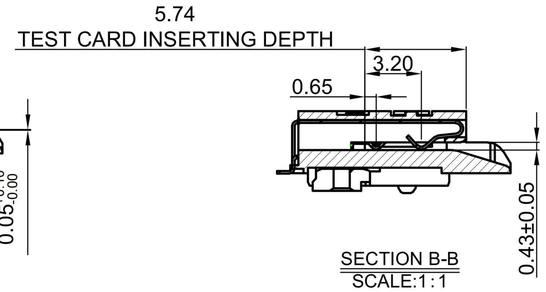


SECTION B-B
SCALE:1:1

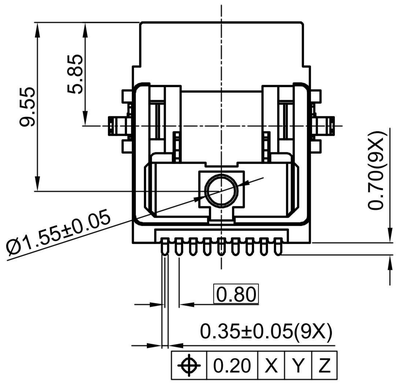


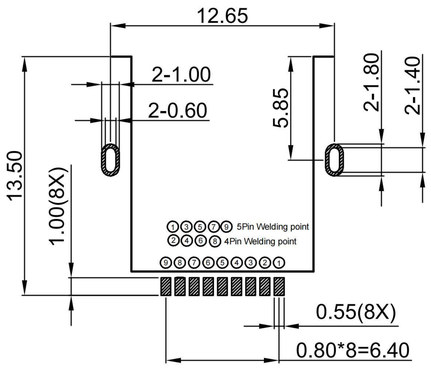


RECOMMENDED PCB LAYOUT
TOLERANCE:±0.05

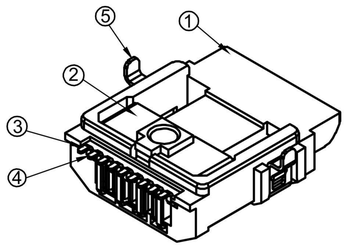


**G-Switch Specification:**

1. Current rating:0.3A
2. Dielectric withstanding voltage:500 V(AC)
3. Contact Resistance: 50 mΩ Max.
4. Insulation resistance: 500 MΩ Min.
5. Total mating force: 0.20~2.0N.
6. Total unmating force: 0.20~2.0N.
7. Durability Cycle:10,000 Cycles

| ITEM | PART NAME | PART NUMBER | Q'TY | MATERIAL | DESCRIPTION |
|---|---|---|---|---|---|
| 05 | CONTACT C | TL-SK0009TC-800 | 1 PCS | C5191R-H, T=0.20mm | SOLDER: MATTE 100~150" Sn. |
| 04 | CONTACT B | TL-SK0009SB-800 | 5 PCS | C5191R-H, T=0.15mm | CONTACT: G/F Au/SOLDER: MATTE 100~150" Sn. |
| 03 | CONTACT A | TL-SK0009SA-800 | 4 PCS | C5191R-H, T=0.15mm | CONTACT: G/F Au/SOLDER: MATTE 100~150" Sn. |
| 02 | PLAETIC HANDLE | KN-SK0009-1A0H | 1 PCS | PA10T 640 BK003 | BLACK, UL94V-HB |
| 01 | HOUSING | HS-SK0009-1A0H | 1 PCS | PA10T 640 BK003 | BLACK, UL94V-HB |

Pb Process Capable

RoHS Compliant 2002/95/EC

HALOGEN Compliant Halogen Free

| | | | |
|---|---|---|---|
| SCALE: 1:1 | UNIT: mm | Title: Horizontal Medical Connector Offset Type SMT L=12.0mm | |
| SIZE: A4 | | | |
| Unless otherwise General Tolerance: X. ±0.30; X.x ±0.20; X.xx ±0.15; X.xxx ±0.10; Angles ±3° | | Molde Code: SK-0009S00-111-1A2H | |
| DRAWN: Xia | CHECKED: Chen | APPROVED: Chen | DATE: 2023.02.01 |
| REV: A0 | SHEET: 1/1 | | |

品赞科技 b-Switch ®