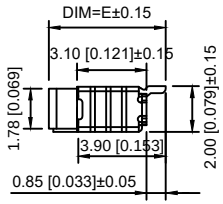

Electrical Characteristics:

Current rating:0.4A AC/DC
Voltage rating:50V AC/DC
Temperature range: -25℃~+85℃
Withstand Voltage:200V AC/Minute
Contact Resistance: ≤20mΩ
Insulation resistance: ≥500MΩ

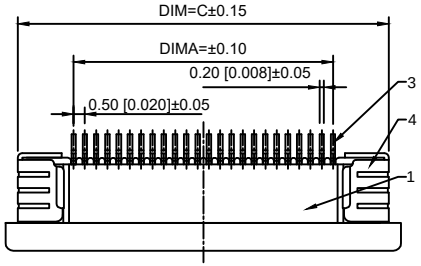

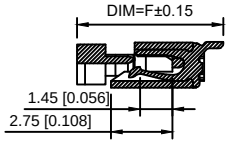

SECTION A-A

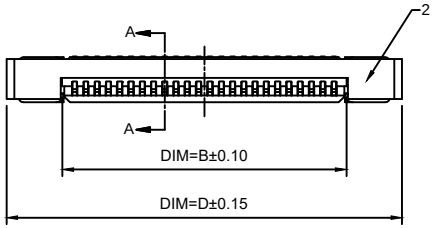

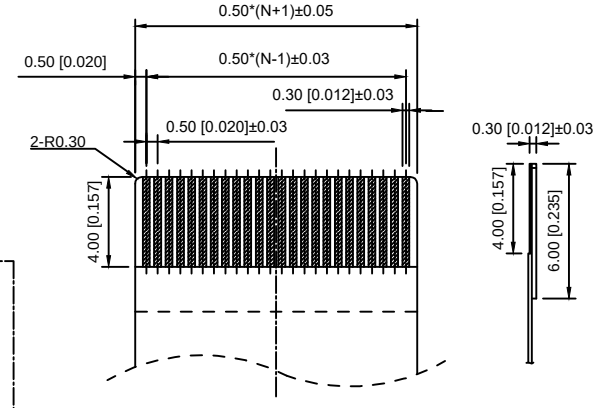

适用扁平线

编号	尺寸（mm）						编号	尺寸（mm）					
	A	B	C	D	E	F		A	B	C	D	E	F
4	1.50	2.60	6.46	7.56			35	17.06	18.16	22.02	23.12		
5	2.00	3.10	6.96	8.06			36	17.57	18.66	22.53	23.62		
6	2.51	3.60	7.47	8.56			37	18.07	19.16	23.03	24.12		
7	3.01	4.10	7.97	9.06			38	18.57	19.66	23.53	24.62		
8	3.51	4.60	8.47	9.56			39	19.07	20.17	24.03	25.13		
9	4.01	5.11	8.97	10.07			40	19.57	20.67	24.53	25.63		
10	4.51	5.61	9.47	10.57			41	20.08	21.17	25.04	26.13		
11	5.02	6.11	9.98	11.07			42	20.58	21.67	25.54	26.63		
12	5.52	6.61	10.48	11.57			43	21.08	22.17	26.04	27.13		
13	6.02	7.11	10.98	12.07			44	21.58	22.68	26.64	27.64		
14	6.52	7.62	11.48	12.58			45	22.08	23.18	27.04	28.14		
15	7.02	8.12	11.98	13.08			46	22.59	23.68	27.55	28.64		
16	7.53	8.62	12.49	13.58			47	23.09	24.18	28.05	29.14		
17	8.03	9.12	12.99	14.08			48	23.59	24.68	28.55	29.64		
18	8.53	9.62	13.49	14.58			49	24.09	25.19	29.05	30.15		
19	9.03	10.13	13.99	15.09	5.20	6.50	50	24.59	25.69	29.55	30.65	5.70	7.00
20	9.53	10.63	14.49	15.59			51	25.10	26.19	30.06	31.15		
21	10.00	11.13	15.00	16.09			52	25.60	26.69	30.56	31.65		
22	10.54	11.63	15.50	16.59			53	26.10	27.19	31.06	32.15		
23	11.04	12.13	16.00	17.09			54	26.60	27.70	31.66	32.65		
24	11.54	12.64	16.50	17.60			55	27.10	28.20	32.06	33.16		
25	12.04	13.14	17.00	18.10			56	27.61	28.70	32.57	33.66		
26	12.55	13.64	17.51	18.60			57	28.11	29.20	33.07	34.16		
27	13.05	14.14	18.01	19.10			58	28.61	29.70	33.57	34.66		
28	13.55	14.64	18.51	19.60			59	29.11	30.21	34.07	35.17		
29	14.05	15.15	19.01	20.11			60	29.61	30.71	34.57	35.67		
30	14.55	15.65	19.51	20.61									
31	15.06	16.15	20.02	21.11									
32	15.56	16.65	20.52	21.61									
33	16.0600	17.15	21.02	22.11									
34	16.56	17.66	21.52	22.62									

序号	名称	数量	材料	附注
1	塑件	1	LCP	本色
2	锁扣	1	LCP	本色
3	插簧	N	磷铜	镍底，高亚锡
4	焊片	2	磷铜	镍底，高亚锡

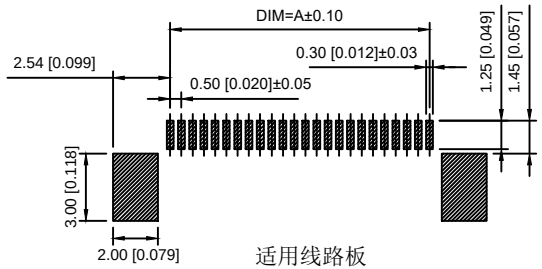

适用线路板

————	new	2015/5/3	A	瀚源		
ECN BO.	DESCRIPTION.	DATE.	REV.			
DESIGNED	CHECKED	APPROVAL	DRAWING NUMBER		SCALT: 1/2	SCALE: 3:1
Mikey	Tom	Jerry	PART NAME	05B20UXX	UNLESS OTHERWISE SPECIFIED,TOLERANCE:	X. ±0.25 X.x ±0.20 X.xx ±0.15 ANGULAR ±3°
			MODEL NAME	H-05B20UXX		
			3RD ANGLE PROJ	HanElectricity Co.,LTD		FILE.NO.