具有 ±18kV IEC ESD 保护功能的 THVD15xx 5V RS-485 收发器

1 特性

- 符合或超过 TIA/EIA-485A 标准要求
- 4.5V 至 5.5V 电源电压
- 集成总线 I/O 保护
  - ±30kV HBM ESD
  - ±18kV IEC 61000-4-2 ESD 接触放电
  - ±25kV IEC 61000-4-2 ESD 空气间隙放电
  - ±4kV IEC 61000-4-4 电气快速瞬变
- 扩展级运行共模：± 15V
- 低 EMI 500kbps 和 50Mbps 数据速率
- 扩展温度范围：-40°C 至 125°C
- 用于噪声抑制的大接收器滞后
- 低功耗
  - 低待机电源电流：小于 1μA
  - 运行期间的电流：< 1mA
- 适用于热插拔功能的无干扰加电/断电
- 开路、短路和空闲总线失效防护
- 1/8 单位负载选项（多达 256 个总线节点）
- 小尺寸 VSSOP 封装（可节省布板空间）或 SOIC 封装（可实现快插兼容性）

2 应用

- 电机驱动器
- 工厂自动化与控制
- 电网基础设施
- 楼宇自动化
- HVAC 系统
- 视频监控
- 过程分析
- 电信基础设施

3 说明

THVD15xx 是一系列抗噪 RS-485/RS-422 收发器，专用于在恶劣的工业环境中运行。这些器件的总线引脚可耐受高级别的 IEC 电气快速瞬变 (EFT) 和 IEC 静电放电 (ESD) 事件，从而无需使用其他系统级保护组件。

每个器件由 5V 单电源供电。该系列中的器件具有扩展共模电压范围，因此这些器件适用于长电缆上的 多点应用。

THVD15xx 系列器件采用小型 VSSOP 封装，适用于空间受限的 应用。这些器件在自然通风环境下的额定温度范围为 –40°C 至 125°C。

器件信息(1)

器件型号	封装	封装尺寸（标称值）
THVD1510 THVD1550	VSSOP (8)	3.00mm × 3.00mm
	SOIC (8)	4.90mm × 3.91mm
THVD1551	VSSOP (8)	3.00mm × 3.00mm
THVD1512	VSSOP (10)	3.00mm × 3.00mm
THVD1552	VSSOP (10)	3.00mm × 3.00mm
	SOIC (14)	8.65mm × 3.91mm

(1) 如需了解所有可用封装，请参阅产品说明书末尾的可订购产品附录。

THVD1510 和 THVD1550 简化原理图

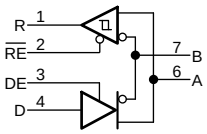

THVD1551 简化原理图

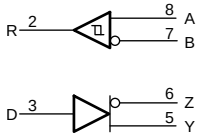

THVD1512 和 THVD1552 简化原理图

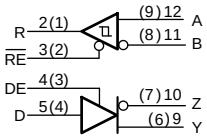

本文档旨在为方便起见，提供有关 TI 产品中文版本的信息，以确认产品的概要。 有关适用的官方英文版本的最新信息，请访问 www.ti.com，其内容始终优先。 TI 不保证翻译的准确性和有效性。 在实际设计之前，请务必参考最新版本的英文版本。

目录

1 特性 ... 1
2 应用 ... 1
3 说明 ... 1
4 修订历史记录 ... 2
5 **Device Comparison Table** ... 3
6 **Pin Configuration and Functions** ... 3
7 **Specifications** ... 6
7.1 Absolute Maximum Ratings ... 6
7.2 ESD Ratings ... 6
7.3 Recommended Operating Conditions ... 7
7.4 Thermal Information ... 7
7.5 Power Dissipation ... 7
7.6 Electrical Characteristics ... 8
7.7 Switching Characteristics ... 9
7.8 Switching Characteristics ... 9
7.9 Typical Characteristics ... 10
8 **Parameter Measurement Information** ... 11
9 **Detailed Description** ... 14
9.1 Overview ... 14
9.2 Functional Block Diagrams ... 14
9.3 Feature Description ... 14
9.4 Device Functional Modes ... 15
10 **Application and Implementation** ... 18
10.1 **Application Information** ... 18
10.2 Typical Application ... 18
11 **Power Supply Recommendations** ... 24
12 **Layout** ... 25
12.1 Layout Guidelines ... 25
12.2 Layout Example ... 25
13 器件和文档支持 ... 26
13.1 器件支持 ... 26
13.2 第三方产品免责声明 ... 26
13.3 相关链接 ... 26
13.4 接收文档更新通知 ... 26
13.5 社区资源 ... 26
13.6 商标 ... 26
13.7 静电放电警告 ... 26
13.8 术语表 ... 26
14 机械、封装和可订购信息 ... 27

4 修订历史记录

Changes from Revision B (July 2018) to Revision C	**Page**
• Changed the Description of pins 13 and 14 in the *Pin Functions* table for THVD1512, THVD1552 D package	5

Changes from Revision A (January 2018) to Revision B	**Page**
• Added T_{SD} to the *Electrical Characteristics* table	8

Changes from Original (September 2017) to Revision A	**Page**
• Changed the Machine model (MM) value From: ±400 To: ±200 in the *ESD Ratings*	6
• Changed the V_{OH} MIN value From: 2.4 V To: 4 V in the *Electrical Characteristics* table	8

Copyright © 2017–2018, Texas Instruments Incorporated

5 Device Comparison Table

PART NUMBER	DUPLEX	ENABLES	SIGNALING RATE	NODES
THVD1512	Full	DE, $\overline{RE}$	up to 500 kbps	256
THVD1510	Half	DE, $\overline{RE}$		
THVD1552	Full	DE, $\overline{RE}$	up to 50 Mbps	196
THVD1551	Full	None		
THVD1550	Half	DE, $\overline{RE}$		

6 Pin Configuration and Functions

THVD1510, THVD1550 Devices
8-Pin D Package (SOIC)
Top View

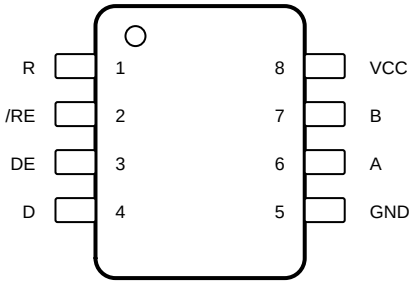

Not to scale

THVD1510, THVD1550 Devices
8-Pin DGK Package (VSSOP)
Top View

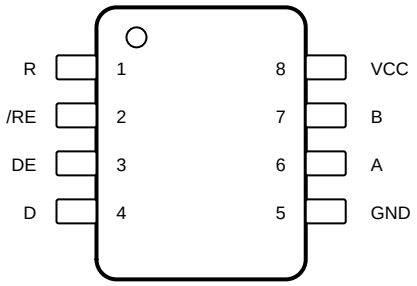

Not to scale

Pin Functions

PIN			I/O	DESCRIPTION
NAME	D	DGK		
A	6	6	Bus input/output	Bus I/O port, A (complementary to B)
B	7	7	Bus input/output	Bus I/O port, B (complementary to A)
D	4	4	Digital input	Driver data input
DE	3	3	Digital input	Driver enable, active high (2 MΩ internal pull-down)
GND	5	5	Ground	Device ground
R	1	1	Digital output	Receive data output
V_{CC}	8	8	Power	5-V supply
$\overline{RE}$	2	2	Digital input	Receiver enable, active low (2 MΩ internal pull-up)

Copyright © 2017–2018, Texas Instruments Incorporated

THVD1551 Device
8-Pin DGK Package (VSSOP)
Top View

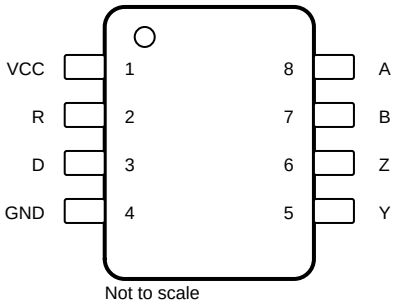

Pin Functions

PIN		I/O	DESCRIPTION
NAME	DGK		
A	8	Bus input	Bus input, A (complementary to B)
B	7	Bus input	Bus input, B (complementary to A)
D	3	Digital input	Driver data input
GND	4	Ground	Device ground
R	2	Digital output	Receive data output
V_{CC}	1	Power	5-V supply
Y	5	Bus output	Bus output, Y (complementary to Z)
Z	6	Bus output	Bus output, Z (complementary to Y)

Copyright © 2017–2018, Texas Instruments Incorporated

THVD1552 Device
14-Pin D Package (SOIC)
Top View

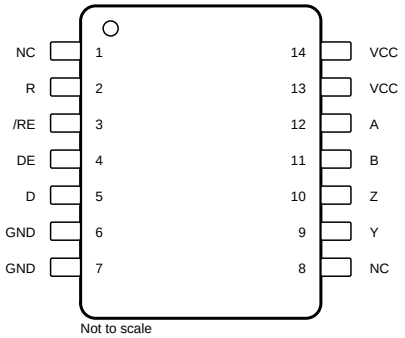

Not to scale

THVD1512, THVD1552 Devices
10-Pin DGS Package (VSSOP)
Top View

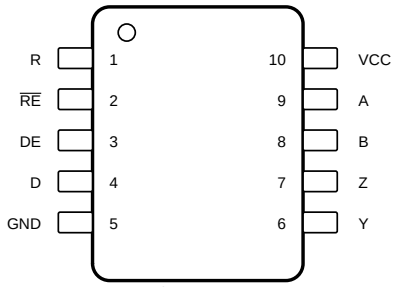

Not to scale

Pin Functions

PIN			I/O	DESCRIPTION
NAME	D	DGS		
A	12	9	Bus input	Bus input, A (complementary to B)
B	11	8	Bus input	Bus input, B (complementary to A)
D	5	4	Digital input	Driver data input
DE	4	3	Digital input	Driver enable, active high (2 MΩ internal pull-down)
GND	6, 7 (1)	5	Ground	Device ground
NC	1, 8	—	—	Internally not connected
R	2	1	Digital output	Receive data output
V_{CC}	—	10	Power	5-V supply.
	13, 14	—	Power	5-V supply. These pins are not connected together internally, so power must be applied to both.
Y	9	6	Bus output	Bus output, Y (Complementary to Z)
Z	10	7	Bus output	Bus output, Z (Complementary to Y)
$\overline{RE}$	3	2	Digital input	Receiver enable, active low (2 MΩ internal pull-up)

(1) These pins are internally connected

Copyright © 2017–2018, Texas Instruments Incorporated

7 Specifications

7.1 Absolute Maximum Ratings

over operating free-air temperature range (unless otherwise noted)[1]

		MIN	MAX	UNIT
Supply voltage	V_{CC}	–0.5	7	V
Bus voltage	Range at any bus pin (A, B, Y, or Z) as differential or common-mode with respect to GND	–18	18	V
Input voltage	Range at any logic pin (D, DE, or $\overline{RE}$)	–0.3	5.7	V
Receiver output current	I_O	–24	24	mA
Storage temperature, T_{stg}		–65	150	°C

(1) Stresses beyond those listed under *Absolute Maximum Ratings* may cause permanent damage to the device. These are stress ratings only, which do not imply functional operation of the device at these or any other conditions beyond those indicated under *Recommended Operating Conditions*. Exposure to absolute-maximum-rated conditions for extended periods may affect device reliability.

7.2 ESD Ratings

				VALUE	UNIT
$V_{(ESD)}$	Electrostatic discharge	Contact discharge, per IEC 61000-4-2	Bus terminals and GND	±18,000	V
		Air-gap discharge, per IEC 61000-4-2	Bus terminals and GND	±25,000	
		Human-body model (HBM), per ANSI/ESDA/JEDEC JS-001[1]	Bus terminals and GND	±30,000	
			All pins except Bus terminals and GND	±8,000	
		Charged-device model (CDM), per JEDEC specification JESD22-C101[2]		±1,500	
		Machine model (MM), per JEDEC JESD22-A115-A		±200	
$V_{(EFT)}$	Electrical fast transient	Per IEC 61000-4-4	Bus terminals	±4,000	V

(1) JEDEC document JEP155 states that 500-V HBM allows safe manufacturing with a standard ESD control process.
(2) JEDEC document JEP157 states that 250-V CDM allows safe manufacturing with a standard ESD control process.

Copyright © 2017–2018, Texas Instruments Incorporated

7.3 Recommended Operating Conditions

over operating free-air temperature range (unless otherwise noted)

			MIN	NOM	MAX	UNIT
V_{CC}	Supply voltage		4.5		5.5	V
V_I	Input voltage at any bus terminal (1)		-15		15	V
V_{IH}	High-level input voltage (driver, driver enable, and receiver enable inputs)		2		V_{CC}	V
V_{IL}	Low-level input voltage (driver, driver enable, and receiver enable inputs)		0		0.8	V
V_{ID}	Differential input voltage		-15		15	V
I_O	Output current, driver		-60		60	mA
I_{OR}	Output current, receiver		-8		8	mA
R_L	Differential load resistance		54			Ω
$1/t_{UI}$	Signaling rate	THVD1510, THVD1512			500	kbps
		THVD1550, THVD1551, THVD1552			50	Mbps
T_A	Operating ambient temperature		-40		125	°C
T_J	Junction temperature		-40		150	°C

(1) The algebraic convention, in which the least positive (most negative) limit is designated as minimum is used in this data sheet.

7.4 Thermal Information

THERMAL METRIC (1)		THVD1510 THVD1550	THVD1552	THVD1510 THVD1550 THVD1551	THVD1512 THVD1552	UNIT
		D (SOIC)	D (SOIC)	DGK (VSSOP)	DGS (VSSOP)	
		8 PINS	14 PINS	8 PINS	10 PINS	
$R_{\theta JA}$	Junction-to-ambient thermal resistance	112.4	88.0	151.7	151.4	°C/W
$R_{\theta JC(top)}$	Junction-to-case (top) thermal resistance	62.7	45.4	62.8	59.3	°C/W
$R_{\theta JB}$	Junction-to-board thermal resistance	62.0	44.1	81.3	81.6	°C/W
ψ_{JT}	Junction-to-top characterization parameter	15.4	11.3	7.8	6.5	°C/W
ψ_{JB}	Junction-to-board characterization parameter	61.3	43.7	79.8	79.9	°C/W
$R_{\theta JC(bot)}$	Junction-to-case (bottom) thermal resistance	N/A	N/A	N/A	N/A	°C/W

(1) For more information about traditional and new thermal metrics, see the Semiconductor and IC Package Thermal Metrics application report.

7.5 Power Dissipation

PARAMETER		TEST CONDITIONS			VALUE	UNIT
PD	Driver and receiver enabled, V_{CC} = 5.5 V, T_A = 125 °C, 50% duty cycle square wave at signaling rate	Unterminated R_L = 300 Ω, C_L = 50 pF (driver)	THVD151x	500 kbps	210	mW
			THVD155x	50 Mbps	350	
		RS-422 load R_L = 100 Ω, C_L = 50 pF (driver)	THVD151x	500 kbps	220	mW
			THVD155x	50 Mbps	330	
		RS-485 load R_L = 54 Ω, C_L = 50 pF (driver)	THVD151x	500 kbps	250	mW
			THVD155x	50 Mbps	340	

Copyright © 2017–2018, Texas Instruments Incorporated

7.6 Electrical Characteristics

over operating free-air temperature range (unless otherwise noted)

PARAMETER		TEST CONDITIONS			MIN	TYP	MAX	UNIT
Driver								
$\|V_{OD}\|$	Driver differential output voltage magnitude	R_L = 60 Ω, -15 V ≤ V_{test} ≤ 15 V, (See 图 11)			1.5	2.7		V
		R_L = 100 Ω (See 图 12)			2	3		V
		R_L = 54 Ω (See 图 12)			1.5	2.7		V
$\Delta\|V_{OD}\|$	Change in differential output voltage	R_L = 54 Ω (See 图 12)			–200		200	mV
V_{OC}	Common-mode output voltage				1	V_{CC}/2	3	V
$\Delta V_{OC(SS)}$	Change in steady-state common-mode output voltage				–200		200	mV
I_{OS}	Short-circuit output current	DE = V_{CC}, -15 V ≤ V_O ≤ 15V			–250		250	mA
Receiver								
I_I	Bus input current	DE = 0 V, V_{CC} = 0 V or 5.5 V	THVD151x	V_I = 12 V		75	125	µA
				V_I = 15 V		95	156	
				V_I = -7 V	-100	-40		
				V_I = -15 V	-215	-85		
			THVD155x	V_I = 12 V		115	160	
				V_I = 15 V		150	200	
				V_I = -7 V	-130	-75		
				V_I = -15 V	-280	-180		
Receiver								
V_{TH+}	Positive-going input threshold voltage	Over common-mode range of - 7 V to +12 V			See(1)	–85	–20	mV
V_{TH-}	Negative-going input threshold voltage				–200	–135	See(1)	mV
V_{HYS}	Input hysteresis					50		mV
V_{TH+}	Positive-going input threshold voltage	Over common-mode range of ± 15 V			See(1)	–85	–20	mV
V_{TH-}	Negative-going input threshold voltage				–220	–135	See(1)	mV
V_{HYS}	Input hysteresis					50		mV
V_{OH}	Output high voltage	I_{OH} = -8 mA			4	V_{CC} - 0.3		V
V_{OL}	Output low voltage	I_{OL} = 8 mA				0.2	0.4	V
I_{OZ}	Output high-impedance current	V_O = 0 V or V_{CC}, $\overline{RE}$ = V_{CC}			-1		1	µA
Logic								
I_{IN}	Input current (D, DE, $\overline{RE}$)	4.5 V ≤ V_{CC} ≤ 5.5 V, 0 V ≤ V_{IN} ≤ V_{CC}			–5	0	5	µA
Supply								
I_{CC}	Supply current (quiescent)	Driver and receiver enabled		$\overline{RE}$ = 0 V, DE = V_{CC}, No load		700	1000	µA
		Driver enabled, receiver disabled		$\overline{RE}$ = V_{CC}, DE = V_{CC}, No load		400	620	µA
		Driver disabled, receiver enabled		$\overline{RE}$ = 0 V, DE = 0 V, No load		400	630	µA
		Driver and receiver disabled		$\overline{RE}$ = V_{CC}, DE = 0 V, D = open, No load		0.1	1	µA
T_{SD}	Thermal shutdown temperature					170		°C

(1) Under any specific conditions, V_{TH+} is specified to be at least V_{HYS} higher than V_{TH-}.

Copyright © 2017–2018, Texas Instruments Incorporated

7.7 Switching Characteristics

500-kbps devices (THVD1510, THVD1512) over recommended operating conditions

PARAMETER		TEST CONDITIONS		MIN	TYP	MAX	UNIT
Driver							
t_r, t_f	Differential output rise/fall time	R_L = 54 Ω, C_L = 50 pF	See 图 13	300	400	600	ns
t_{PHL}, t_{PLH}	Propagation delay				350	500	ns
$t_{SK(P)}$	Pulse skew, $\|t_{PHL} – t_{PLH}\|$					15	ns
t_{PHZ}, t_{PLZ}	Disable time (THVD1510, THVD1512)		See 图 14 and 图 15		110	200	ns
t_{PZH}, t_{PZL}	Enable time (THVD1510, THVD1512)	$\overline{RE}$ = 0 V			100	500	ns
		$\overline{RE}$ = V_{CC}			2	4	µs
Receiver							
t_r, t_f	Differential output rise/fall time	C_L = 15 pF	See 图 16		15	25	ns
t_{PHL}, t_{PLH}	Propagation delay				50	60	ns
$t_{SK(P)}$	Pulse skew, $\|t_{PHL} – t_{PLH}\|$					10	ns
t_{PHZ}, t_{PLZ}	Disable time (THVD1510, THVD1512)				30	40	ns
$t_{PZH(1)}$, $t_{PZL(1)}$, $t_{PZH(2)}$, $t_{PZL(2)}$	Enable time (THVD1510, THVD1512)	DE = V_{CC}	See 图 17		60	100	ns
		DE = 0 V	See 图 18		3	8	µs

7.8 Switching Characteristics

50-Mbps devices (THVD1550, THVD1551, THVD1552) over recommended operating conditions

PARAMETER		TEST CONDITIONS		MIN	TYP	MAX	UNIT
Driver							
t_r, t_f	Differential output rise/fall time	R_L = 54 Ω, C_L = 50 pF	See 图 13	1	2	6	ns
t_{PHL}, t_{PLH}	Propagation delay			5	10	16	ns
$t_{SK(P)}$	Pulse skew, $\|t_{PHL} – t_{PLH}\|$					3.5	ns
t_{PHZ}, t_{PLZ}	Disable time (THVD1550, THVD1552)		See 图 14 and 图 15		10	22	ns
t_{PZH}, t_{PZL}	Enable time (THVD1550, THVD1552)	$\overline{RE}$ = 0 V			10	22	ns
		$\overline{RE}$ = V_{CC}			2	4	µs
Receiver							
t_r, t_f	Differential output rise/fall time	C_L = 15 pF	See 图 16	1	3	6	ns
t_{PHL}, t_{PLH}	Propagation delay				30	45	ns
$t_{SK(P)}$	Pulse skew, $\|t_{PHL} – t_{PLH}\|$					2	ns
t_{PHZ}, t_{PLZ}	Disable time (THVD1550, THVD1552)				8	18	ns
$t_{PZH(1)}$, $t_{PZL(1)}$, $t_{PZH(2)}$, $t_{PZL(2)}$	Enable time (THVD1550, THVD1552)	DE = V_{CC}	See 图 17		55	90	ns
		DE = 0 V	See 图 18		3	8	µs

7.9 Typical Characteristics

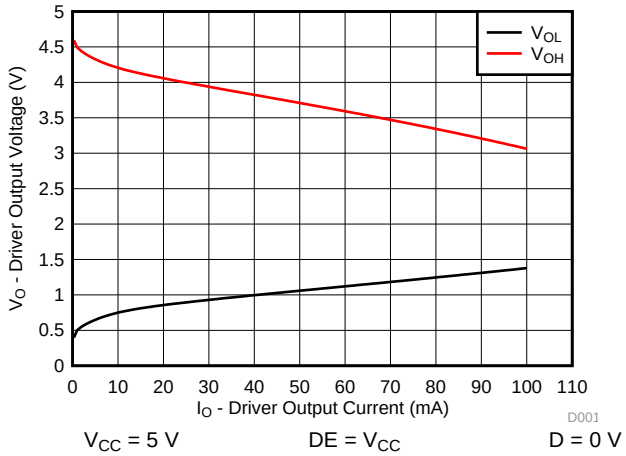

图 1. Driver Output Voltage vs Driver Output Current

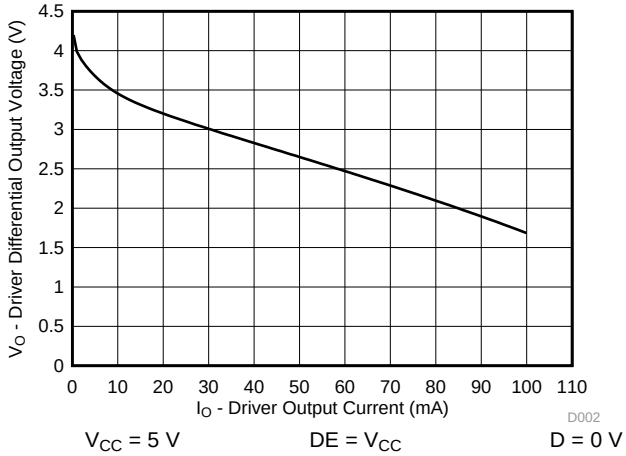

图 2. Driver Differential Output Voltage vs Driver Output

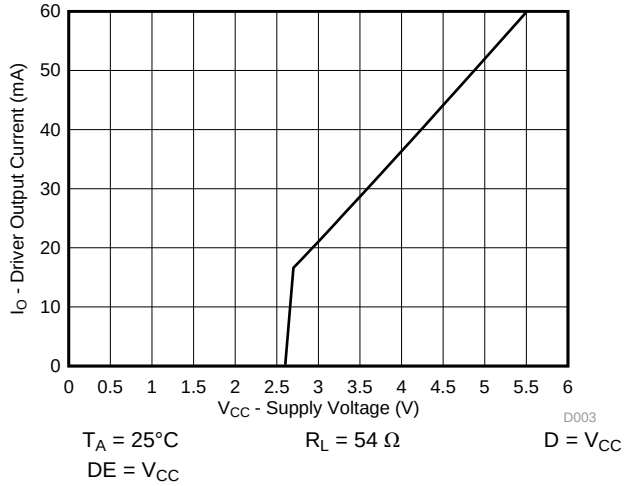

图 3. Driver Output Current vs Supply Voltage

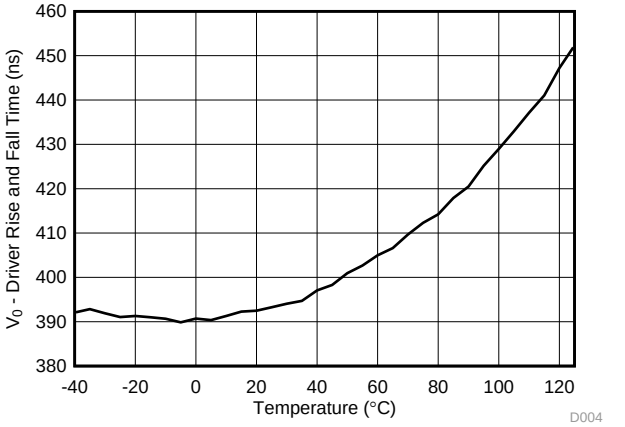

图 4. THVD1510 Driver Rise or Fall Time vs Temperature

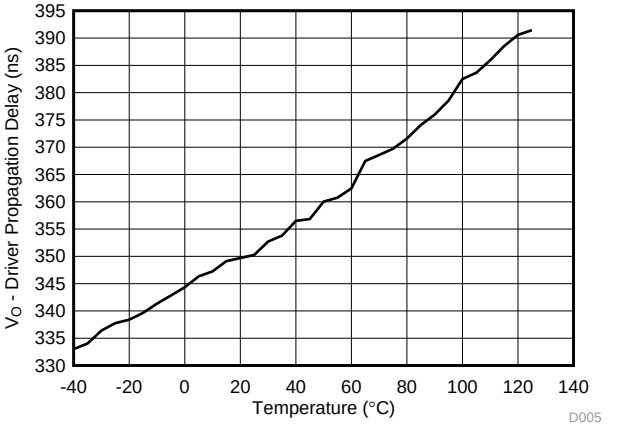

图 5. THVD1510 Driver Propagation Delay vs Temperature

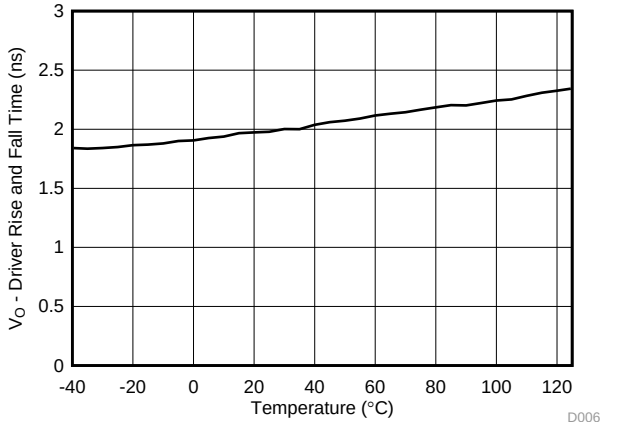

图 6. THVD1550 Driver Rise or Fall Time vs Temperature

版权 © 2017–2018, Texas Instruments Incorporated

Typical Characteristics (接下页)

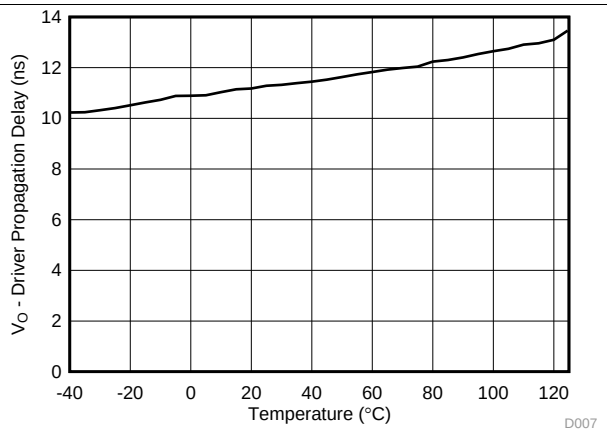

图 7. THVD1550 Driver Propagation Delay vs Temperature

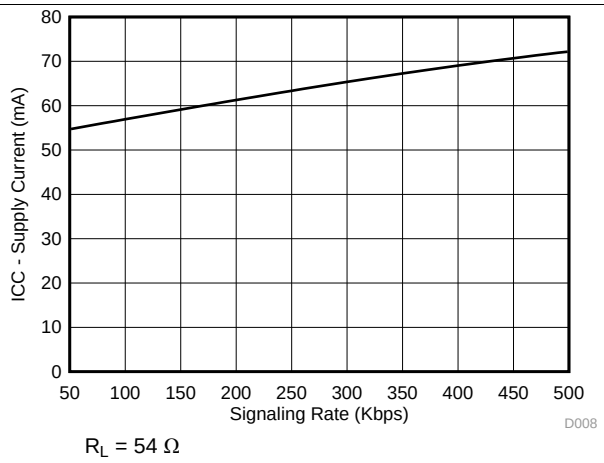

图 8. THVD1510 Supply Current vs Signal Rate

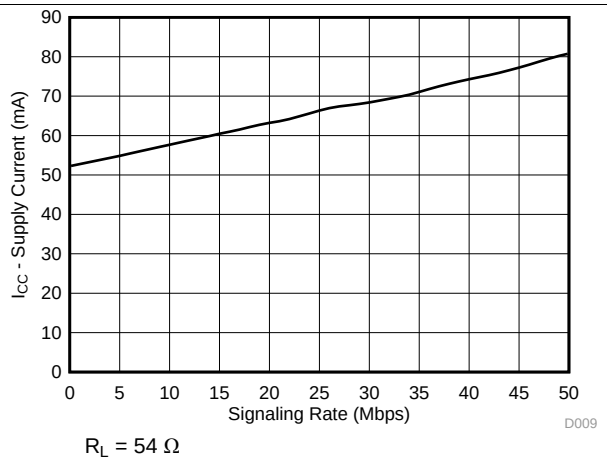

图 9. THVD1550 Supply Current vs Signal Rate

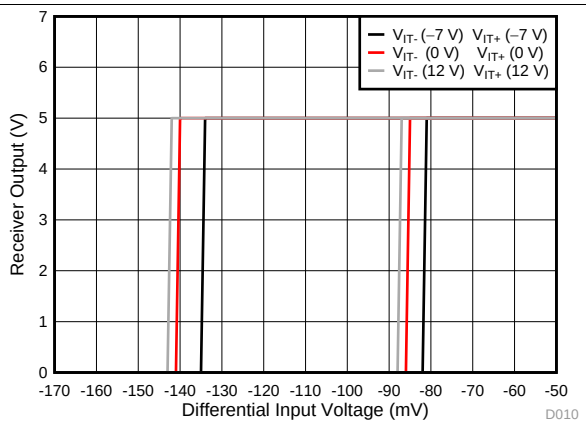

图 10. Receiver Output vs Input

8 Parameter Measurement Information

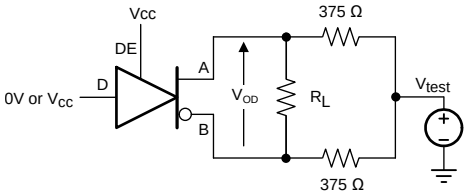

图 11. Measurement of Driver Differential Output Voltage With Common-Mode Load

图 12. Measurement of Driver Differential and Common-Mode Output With RS-485 Load

Parameter Measurement Information (接下页)

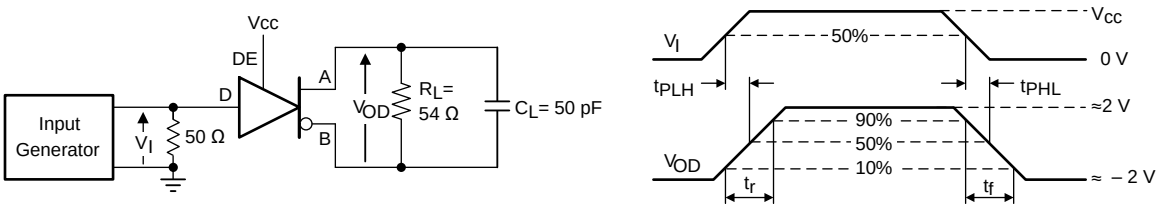

图 13. Measurement of Driver Differential Output Rise and Fall Times and Propagation Delays

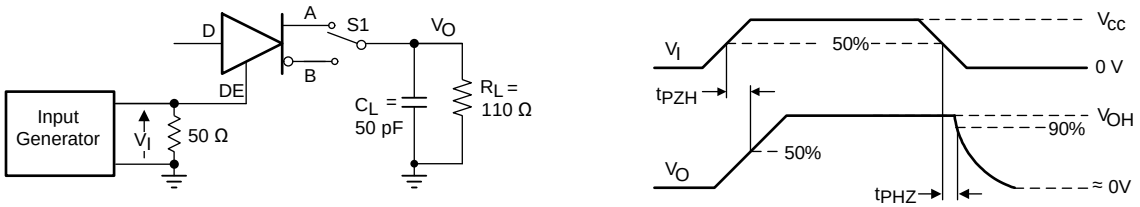

图 14. Measurement of Driver Enable and Disable Times With Active High Output and Pull-Down Load

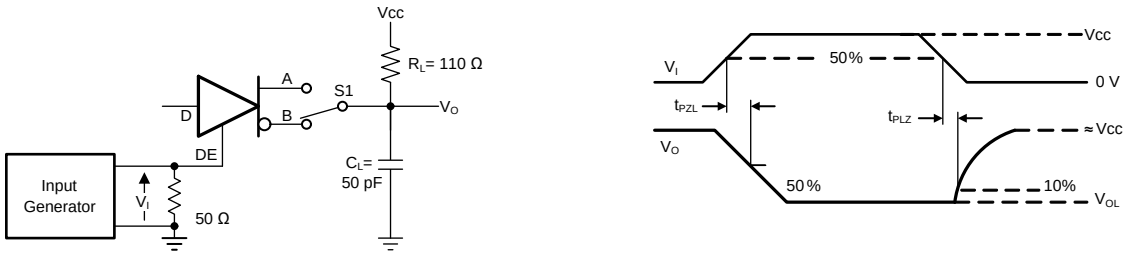

图 15. Measurement of Driver Enable and Disable Times With Active Low Output and Pull-up Load

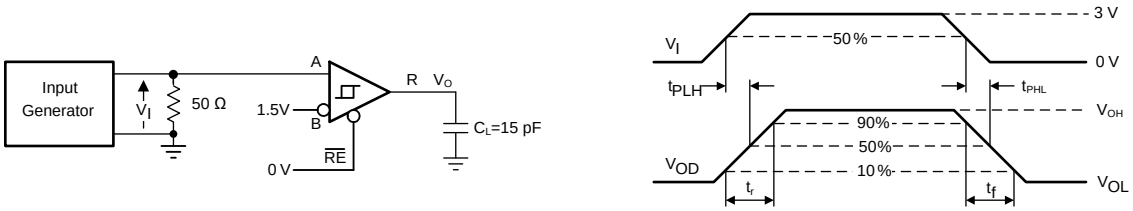

图 16. Measurement of Receiver Output Rise and Fall Times and Propagation Delays

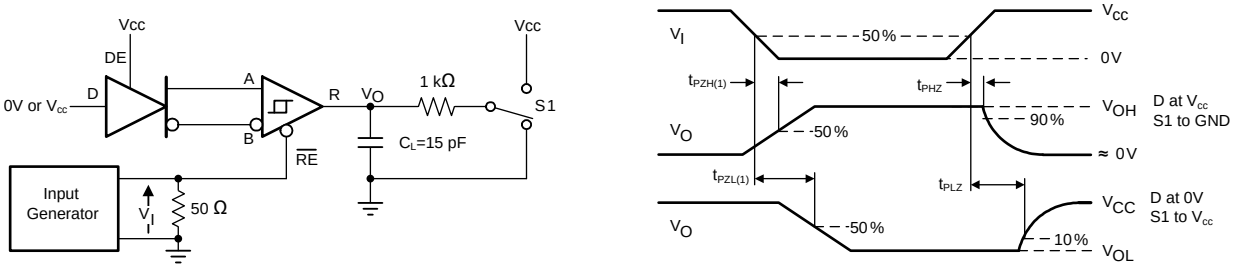

图 17. Measurement of Receiver Enable/Disable Times With Driver Enabled

版权 © 2017–2018, Texas Instruments Incorporated

Parameter Measurement Information (接下页)

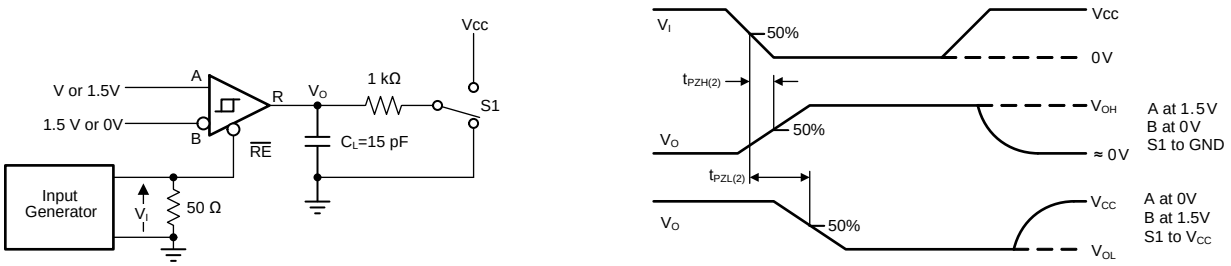

图 18. Measurement of Receiver Enable Times With Driver Disabled

9 Detailed Description

9.1 Overview

THVD1510 and THVD1550 are low-power, half-duplex RS-485 transceivers available in two speed grades suitable for data transmission up to 500 kbps and 50 Mbps respectively.

THVD1551 is fully enabled with no external enabling pins. THVD1512 and THVD1552 have active-high driver enables and active-low receiver enables. A standby current of less than 1 µA can be achieved by disabling both driver and receiver.

9.2 Functional Block Diagrams

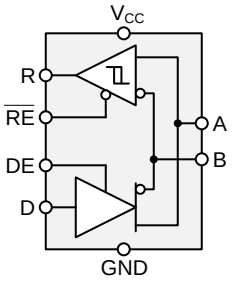

图 19. THVD1510 and THVD1550

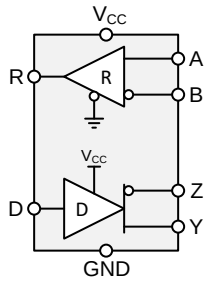

图 20. THVD1551

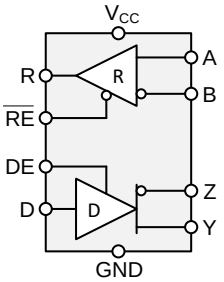

图 21. THVD1512 and THVD1552

9.3 Feature Description

Internal ESD protection circuits of the THVD15xx protect the transceivers against electrostatic discharges (ESD) according to IEC 61000-4-2 of up to ±18 kV and against electrical fast transients (EFT) according to IEC 61000-4-4 of up to ±4 kV. With careful system design, one could achieve ±4 kV EFT Criterion A (no data loss when transient noise is present).

版权 © 2017–2018, Texas Instruments Incorporated

Feature Description (接下页)

The THVD15xx device family provides internal biasing of the receiver input thresholds in combination with large input-threshold hysteresis. The receiver output remains logic high under a bus-idle or bus-short conditions without the need for external failsafe biasing resistors. Device operation is specified over a wide ambient temperature range from –40°C to 125°C.

9.4 Device Functional Modes

9.4.1 Device Functional Modes for THVD1510 and THVD1550

When the driver enable pin, DE, is logic high, the differential outputs A and B follow the logic states at data input D. A logic high at D causes A to turn high and B to turn low. In this case the differential output voltage defined as $V_{OD} = V_A – V_B$ is positive. When D is low, the output states reverse: B turns high, A becomes low, and V_{OD} is negative.

When DE is low, both outputs turn high-impedance. In this condition the logic state at D is irrelevant. The DE pin has an internal pull-down resistor to ground, thus when left open the driver is disabled (high-impedance) by default. The D pin has an internal pull-up resistor to V_{CC}, thus, when left open while the driver is enabled, output A turns high and B turns low.

表 1. Driver Function Table for THVD1510 and THVD1550

INPUT	ENABLE	OUTPUTS		FUNCTION
D	DE	A	B	
H	H	H	L	Actively drive bus high
L	H	L	H	Actively drive bus low
X	L	Z	Z	Driver disabled
X	OPEN	Z	Z	Driver disabled by default
OPEN	H	H	L	Actively drive bus high by default

When the receiver enable pin, $\overline{RE}$, is logic low, the receiver is enabled. When the differential input voltage defined as $V_{ID} = V_A – V_B$ is higher than the positive input threshold, V_{TH+}, the receiver output, R, turns high. When V_{ID} is lower than the negative input threshold, V_{TH-}, the receiver output, R, turns low. If V_{ID} is between V_{TH+} and V_{TH-} the output is indeterminate.

When $\overline{RE}$ is logic high or left open, the receiver output is high-impedance and the magnitude and polarity of V_{ID} are irrelevant. Internal biasing of the receiver inputs causes the output to go failsafe-high when the transceiver is disconnected from the bus (open-circuit), the bus lines are shorted to one another (short-circuit), or the bus is not actively driven (idle bus).

表 2. Receiver Function Table for THVD1510 and THVD1550

DIFFERENTIAL INPUT	ENABLE	OUTPUT	FUNCTION
$V_{ID} = V_A – V_B$	$\overline{RE}$	R	
$V_{TH+} < V_{ID}$	L	H	Receive valid bus high
$V_{TH-} < V_{ID} < V_{TH+}$	L	?	Indeterminate bus state
$V_{ID} < V_{TH-}$	L	L	Receive valid bus low
X	H	Z	Receiver disabled
X	OPEN	Z	Receiver disabled by default
Open-circuit bus	L	H	Fail-safe high output
Short-circuit bus	L	H	Fail-safe high output
Idle (terminated) bus	L	H	Fail-safe high output

9.4.2 Device Functional Modes for THVD1551

For this device, the driver and receiver are fully enabled, thus the differential outputs Y and Z follow the logic states at data input D at all times. A logic high at D causes Y to turn high and Z to turn low. In this case, the differential output voltage defined as $V_{OD} = V_Y – V_Z$ is positive. When D is low, the output states reverse: Z turns high, Y becomes low, and VOD is negative. The D pin has an internal pull-up resistor to V_{CC}, thus, when left open while the driver is enabled, output Y turns high and Z turns low.

表 3. Driver Function Table for THVD1551

INPUT	OUTPUTS		FUNCTIONS
D	Y	Z	
H	H	L	Actively drive bus high
L	L	H	Actively drive bus low
OPEN	H	L	Actively drive bus high by default

When the differential input voltage defined as $V_{ID} = V_A – V_B$ is higher than the positive input threshold, V_{TH+}, the receiver output, R, turns high. When V_{ID} is less than the negative input threshold, $V_{TH–}$, the receiver output, R, turns low. If V_{ID} is between V_{TH+} and $V_{TH–}$ the output is indeterminate. Internal biasing of the receiver inputs causes the output to go failsafe-high when the transceiver is disconnected from the bus (open-circuit), the bus lines are shorted to one another (short-circuit), or the bus is not actively driven (idle bus).

表 4. Receiver Function Table for THVD1551

DIFFERENTIAL INPUT	OUTPUT	FUNCTION
$V_{ID} = V_A – V_B$	R	
$V_{TH+} < V_{ID}$	H	Receive valid bus high
$V_{TH-} < V_{ID} < V_{TH+}$	?	Indeterminate bus state
$V_{ID} < V_{TH-}$	L	Receive valid bus low
Open-circuit bus	H	Fail-safe high output
Short-circuit bus	H	Fail-safe high output
Idle (terminated) bus	H	Fail-safe high output

9.4.3 Device Functional Modes for THVD1512 and THVD1552

When the driver enable pin, DE, is logic high, the differential outputs Y and Z follow the logic states at data input D. A logic high at D causes Y to turn high and Z to turn low. In this case the differential output voltage defined as $V_{OD} = V_Y – V_Z$ is positive. When D is low, the output states reverse: Z turns high, Y becomes low, and V_{OD} is negative.

When DE is low, both outputs turn high-impedance. In this condition the logic state at D is irrelevant. The DE pin has an internal pull-down resistor to ground, thus when left open the driver is disabled (high-impedance) by default. The D pin has an internal pull-up resistor to V_{CC}, thus, when left open while the driver is enabled, output Y turns high and Z turns low.

表 5. Driver Function Table for THVD1512 and THVD1552

INPUT	ENABLE	OUTPUTS		FUNCTION
D	DE	Y	Z	
H	H	H	L	Actively drive bus high
L	H	L	H	Actively drive bus low
X	L	Z	Z	Driver disabled
X	OPEN	Z	Z	Driver disabled by default
OPEN	H	H	L	Actively drive bus high by default

版权 © 2017–2018, Texas Instruments Incorporated

When the receiver enable pin, $\overline{RE}$, is logic low, the receiver is enabled. When the differential input voltage defined as $V_{ID} = V_A – V_B$ is higher than the positive input threshold, V_{TH+}, the receiver output, R, turns high. When V_{ID} is lower than the negative input threshold, V_{TH-}, the receiver output, R, turns low. If V_{ID} is between V_{TH+} and V_{TH-} the output is indeterminate.

When $\overline{RE}$ is logic high or left open, the receiver output is high-impedance and the magnitude and polarity of V_{ID} are irrelevant. Internal biasing of the receiver inputs causes the output to go failsafe-high when the transceiver is disconnected from the bus (open-circuit), the bus lines are shorted to one another (short-circuit), or the bus is not actively driven (idle bus).

表 6. Receiver Function Table for THVD1512 and THVD1552

DIFFERENTIAL INPUT	ENABLE	OUTPUT	FUNCTION
$V_{ID} = V_A – V_B$	$\overline{RE}$	R	
$V_{TH+} < V_{ID}$	L	H	Receive valid bus high
$V_{TH-} < V_{ID} < V_{TH+}$	L	?	Indeterminate bus state
$V_{ID} < V_{TH-}$	L	L	Receive valid bus low
X	H	Z	Receiver disabled
X	OPEN	Z	Receiver disabled by default
Open-circuit bus	L	H	Fail-safe high output
Short-circuit bus	L	H	Fail-safe high output
Idle (terminated) bus	L	H	Fail-safe high output

10 Application and Implementation

注

Information in the following applications sections is not part of the TI component specification, and TI does not warrant its accuracy or completeness. TI's customers are responsible for determining suitability of components for their purposes. Customers should validate and test their design implementation to confirm system functionality.

10.1 Application Information

The THVD15xx family consists of half-duplex and full-duplex RS-485 transceivers commonly used for asynchronous data transmissions. For half-duplex devices, the driver and receiver enable pins allow for the configuration of different operating modes. Full-duplex implementation requires two signal pairs (four wires), and allows each node to transmit data on one pair while simultaneously receiving data on the other pair.

10.2 Typical Application

An RS-485 bus consists of multiple transceivers connecting in parallel to a bus cable. To eliminate line reflections, each cable end is terminated with a termination resistor, R_T, whose value matches the characteristic impedance, Z_0, of the cable. This method, known as parallel termination, generally allows for higher data rates over longer cable length.

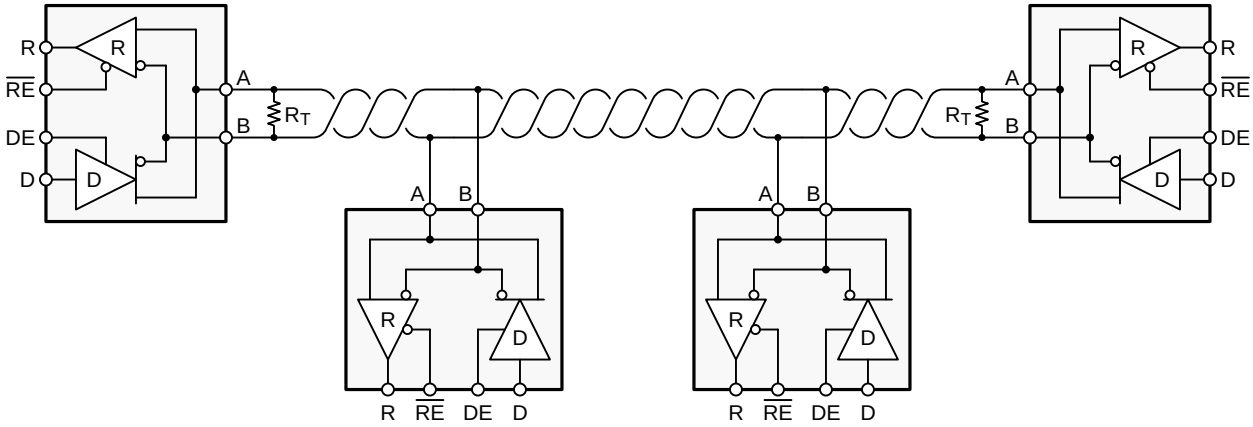

图 22. Typical RS-485 Network With Half-Duplex Transceivers

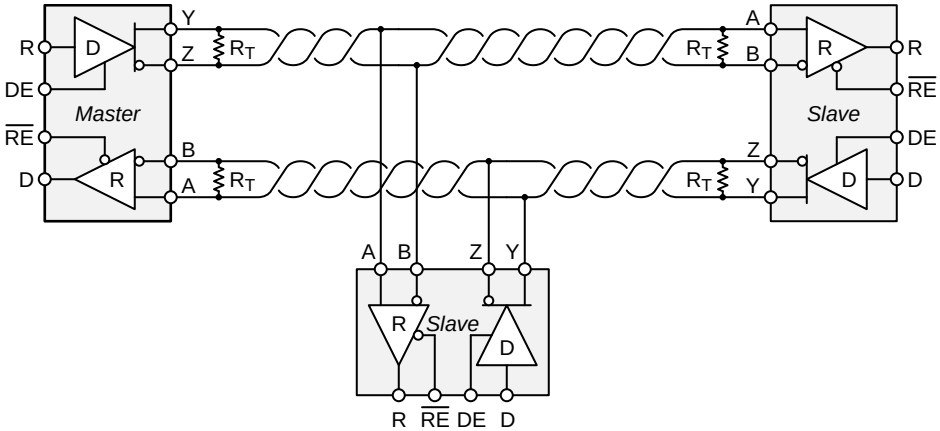

图 23. Typical RS-485 Network With Full-Duplex Transceivers

版权 © 2017–2018, Texas Instruments Incorporated

Typical Application (接下页)

10.2.1 Design Requirements

RS-485 is a robust electrical standard suitable for long-distance networking that may be used in a wide range of applications with varying requirements, such as distance, data rate, and number of nodes.

10.2.1.1 Data Rate and Bus Length

There is an inverse relationship between data rate and cable length, which means the higher the data rate, the shorter the cable length; and conversely, the lower the data rate, the longer the cable length. While most RS-485 systems use data rates between 10 kbps and 100 kbps, some applications require data rates up to 250 kbps at distances of 4000 feet and longer. Longer distances are possible by allowing for small signal jitter of up to 5 or 10%.

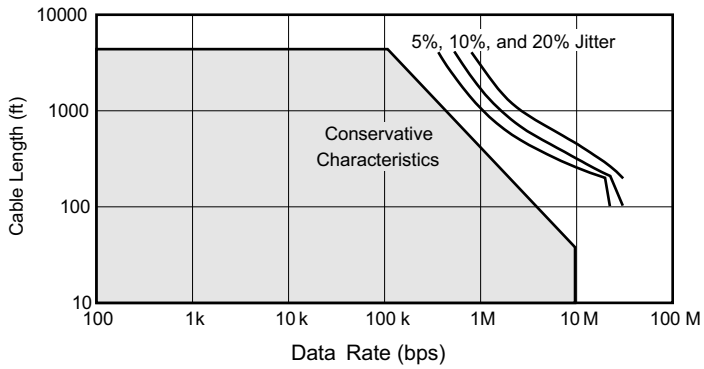

图 24. Cable Length vs Data Rate Characteristic

Even higher data rates are achievable (that is, 50 Mbps for the THVD1550, THVD1551 and THVD1552) in cases where the interconnect is short enough (or has suitably low attenuation at signal frequencies) to not degrade the data.

10.2.1.2 Stub Length

When connecting a node to the bus, the distance between the transceiver inputs and the cable trunk, known as the stub, should be as short as possible. Stubs present a non-terminated piece of bus line which can introduce reflections of varying phase as the length of the stub increases. As a general guideline, the electrical length, or round-trip delay, of a stub should be less than one-tenth of the rise time of the driver, thus giving a maximum physical stub length as shown in 公式 1.

$$L_{(STUB)} \leq 0.1 \times t_r \times v \times c \quad (1)$$

where

- t_r is the 10/90 rise time of the driver
- c is the speed of light (3×10^8 m/s)
- v is the signal velocity of the cable or trace as a factor of c

10.2.1.3 Bus Loading

The RS-485 standard specifies that a compliant driver must be able to drive 32 unit loads (UL), where 1 unit load represents a load impedance of approximately 12 kΩ. Because the THVD15xx family consists of 1/8 UL transceivers, connecting up to 256 receivers to the bus is possible.

Typical Application (接下页)

10.2.1.4 Receiver Failsafe

The differential receivers of the THVD15xx family are failsafe to invalid bus states caused by the following:

- Open bus conditions, such as a disconnected connector
- Shorted bus conditions, such as cable damage shorting the twisted-pair together
- Idle bus conditions that occur when no driver on the bus is actively driving

In any of these cases, the differential receiver will output a failsafe logic high state so that the output of the receiver is not indeterminate.

Receiver failsafe is accomplished by offsetting the receiver thresholds such that the input indeterminate range does not include zero volts differential. In order to comply with the RS-422 and RS-485 standards, the receiver output must output a high when the differential input V_{ID} is more positive than 200 mV, and must output a low when V_{ID} is more negative than –200 mV. The receiver parameters which determine the failsafe performance are V_{TH+}, V_{TH-}, and V_{HYS} (the separation between V_{TH+} and V_{TH-}). As shown in the Electrical Characteristics table, differential signals more negative than –200 mV will always cause a low receiver output, and differential signals more positive than 200 mV will always cause a high receiver output.

When the differential input signal is close to zero, it is still above the V_{TH+} threshold, and the receiver output will be high. Only when the differential input is more than V_{HYS} below V_{TH+} will the receiver output transition to a low state. Therefore, the noise immunity of the receiver inputs during a bus fault conditions includes the receiver hysteresis value, V_{hys}, as well as the value of V_{TH+}.

版权 © 2017–2018, Texas Instruments Incorporated

Typical Application（接下页）

10.2.1.5 Transient Protection

The bus pins of the THVD15xx transceiver family include on-chip ESD protection against ±30-kV HBM and ±18-kV IEC 61000-4-2 contact discharge. The International Electrotechnical Commission (IEC) ESD test is far more severe than the HBM ESD test. The 50% higher charge capacitance, $C_{(S)}$, and 78% lower discharge resistance, $R_{(D)}$, of the IEC model produce significantly higher discharge currents than the HBM model. As stated in the IEC 61000-4-2 standard, contact discharge is the preferred transient protection test method.

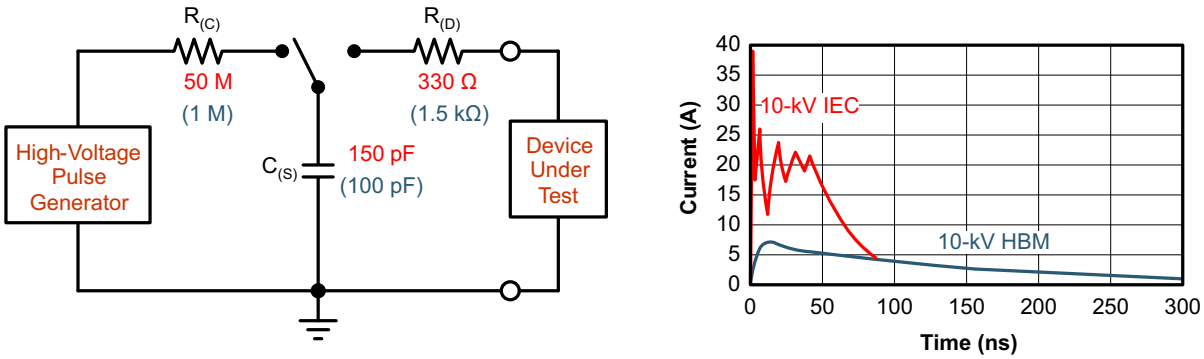

图 25. HBM and IEC ESD Models and Currents in Comparison (HBM Values in Parenthesis)

The on-chip implementation of IEC ESD protection significantly increases the robustness of equipment. Common discharge events occur because of human contact with connectors and cables. Designers may choose to implement protection against longer duration transients, typically referred to as surge transients.

EFTs are generally caused by relay-contact bounce or the interruption of inductive loads. Surge transients often result from lightning strikes (direct strike or an indirect strike which induce voltages and currents), or the switching of power systems, including load changes and short circuit switching. These transients are often encountered in industrial environments, such as factory automation and power-grid systems.

图 26 compares the pulse power of the EFT and surge transients with the power caused by an IEC ESD transient. The left-hand diagram shows the relative pulse-power for a 0.5-kV surge transient and 4-kV EFT transient, both of which dwarf the 10-kV ESD transient visible in the lower-left corner. 500-V surge transients are representative of events that may occur in factory environments in industrial and process automation.

The right-hand diagram shows the pulse-power of a 6-kV surge transient, relative to the same 0.5-kV surge transient. 6-kV surge transients are most likely to occur in power generation and power-grid systems.

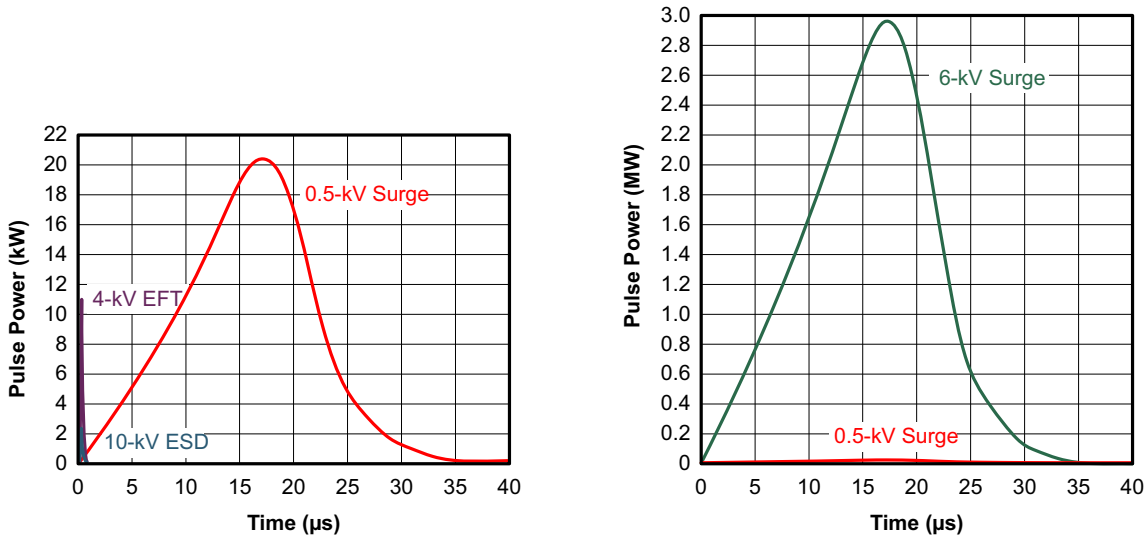

图 26. Power Comparison of ESD, EFT, and Surge Transients

Typical Application (接下页)

In the case of surge transients, high-energy content is characterized by long pulse duration and slow decaying pulse power. The electrical energy of a transient that is dumped into the internal protection cells of a transceiver is converted into thermal energy, which heats and destroys the protection cells, thus destroying the transceiver. 图 27 shows the large differences in transient energies for single ESD, EFT, surge transients, and an EFT pulse train that is commonly applied during compliance testing.

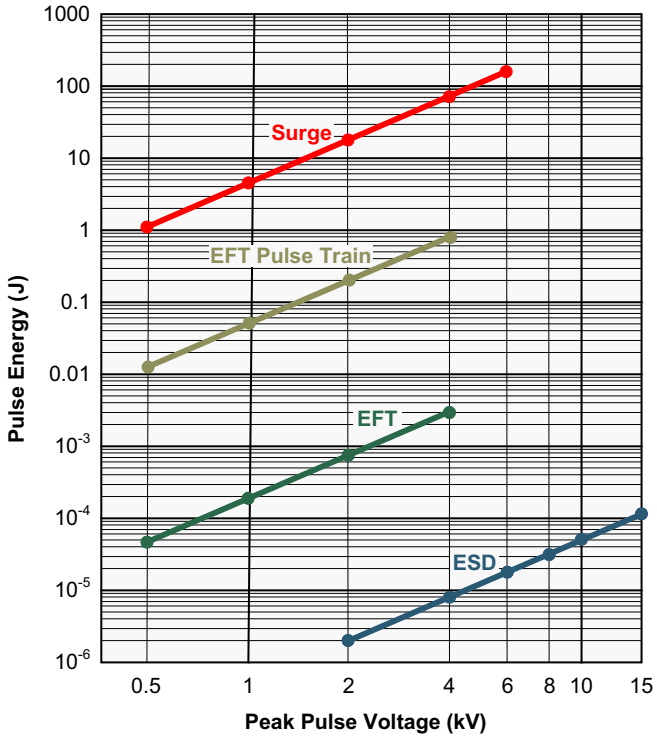

图 27. Comparison of Transient Energies

10.2.2 Detailed Design Procedure

图 28 and 图 29 suggest a protection circuit against 1 kV surge (IEC 61000-4-5) transients. 表 7 shows the associated bill of materials.

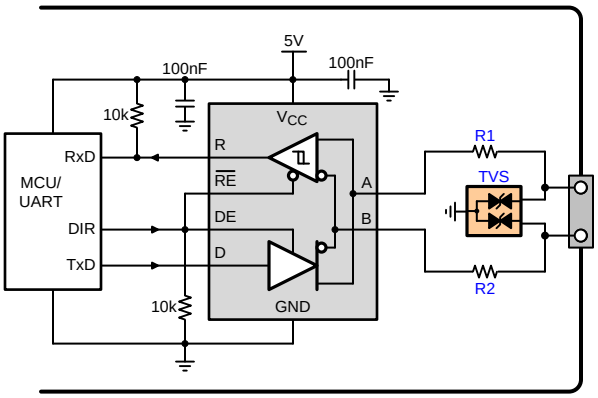

图 28. Transient Protection Against Surge Transients for Half-Duplex Devices

版权 © 2017–2018, Texas Instruments Incorporated

Typical Application（接下页）

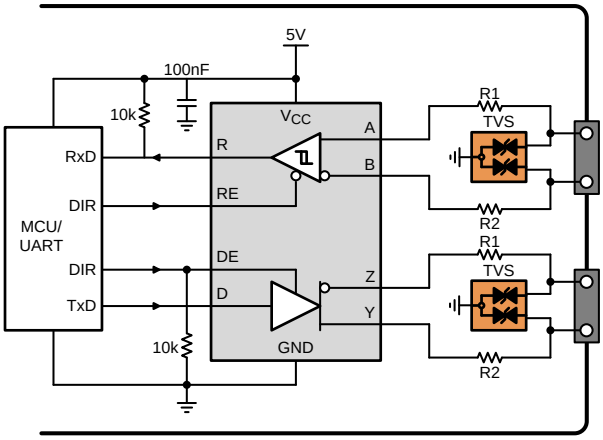

图 29. Transient Protection Against Surge Transients for Full-Duplex Devices

表 7. Bill of Materials

DEVICE	FUNCTION	ORDER NUMBER	MANUFACTURER
XCVR	5-V, RS-485 transceiver	THVD15xx	TI
R1	10-Ω, pulse-proof thick-film resistor	CRCW0603010RJNEAHP	Vishay
R2			
TVS	Bidirectional 400-W transient suppressor	CDSOT23-SM712	Bourns

10.2.3 Application Curves

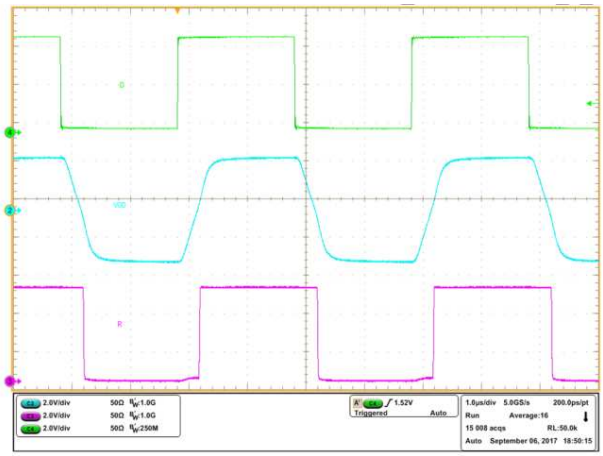

500 kbps

图 30. THVD1510 Waveforms with 60-Ω Termination

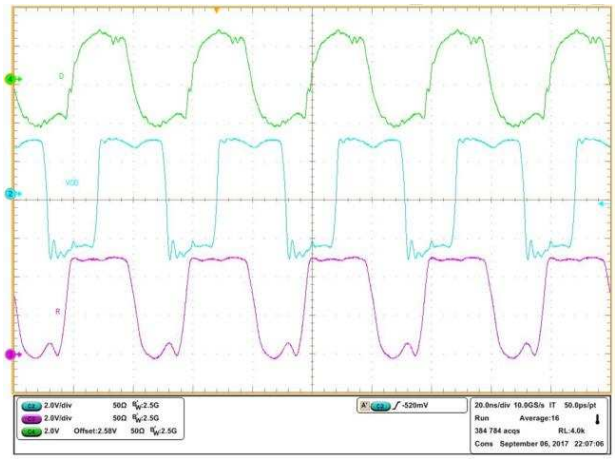

50 Mbps

图 31. THVD1550 Waveforms with 60-Ω Termination

11 Power Supply Recommendations

To ensure reliable operation at all data rates and supply voltages, each supply should be decoupled with a 100 nF ceramic capacitor located as close to the supply pins as possible. This helps to reduce supply voltage ripple present on the outputs of switched-mode power supplies and also helps to compensate for the resistance and inductance of the PCB power planes.

版权 © 2017–2018, Texas Instruments Incorporated

12 Layout

12.1 Layout Guidelines

Robust and reliable bus node design often requires the use of external transient protection devices in order to protect against surge transients that may occur in industrial environments. Since these transients have a wide frequency bandwidth (from approximately 3 MHz to 300 MHz), high-frequency layout techniques should be applied during PCB design.

1. Place the protection circuitry close to the bus connector to prevent noise transients from propagating across the board.
2. Use V_{CC} and ground planes to provide low inductance. Note that high-frequency currents tend to follow the path of least impedance and not the path of least resistance.
3. Design the protection components into the direction of the signal path. Do not force the transient currents to divert from the signal path to reach the protection device.
4. Apply 100-nF to 220-nF decoupling capacitors as close as possible to the V_{CC} pins of transceiver, UART and/or controller ICs on the board.
5. Use at least two vias for V_{CC} and ground connections of decoupling capacitors and protection devices to minimize effective via inductance.
6. Use 1-kΩ to 10-kΩ pullup and pulldown resistors for enable lines to limit noise currents in these lines during transient events.
7. Insert pulse-proof resistors into the A and B bus lines if the TVS clamping voltage is higher than the specified maximum voltage of the transceiver bus pins. These resistors limit the residual clamping current into the transceiver and prevent it from latching up.
8. While pure TVS protection is sufficient for surge transients up to 1 kV, higher transients require metal-oxide varistors (MOVs) which reduce the transients to a few hundred volts of clamping voltage, and transient blocking units (TBUs) that limit transient current to less than 1 mA.

12.2 Layout Example

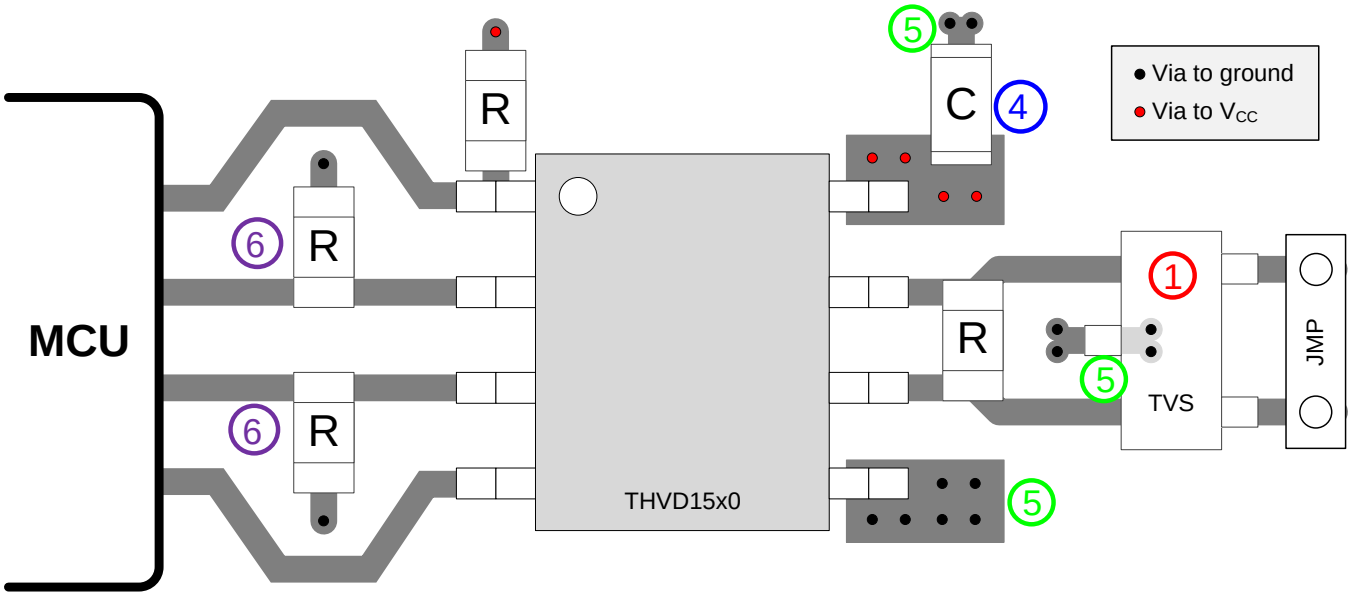

图 32. Half-Duplex Layout Example

13 器件和文档支持

13.1 器件支持

13.2 第三方产品免责声明

TI 发布的与第三方产品或服务有关的信息，不能构成与此类产品或服务或保修的适用性有关的认可，不能构成此类产品或服务单独或与任何 TI 产品或服务一起的表示或认可。

13.3 相关链接

下表列出了快速访问链接。类别包括技术文档、支持和社区资源、工具和软件，以及立即订购快速访问。

表 **8.** 相关链接

器件	产品文件夹	立即订购	技术文档	工具与软件	支持和社区
THVD1510	请单击此处	请单击此处	请单击此处	请单击此处	请单击此处
THVD1512	请单击此处	请单击此处	请单击此处	请单击此处	请单击此处
THVD1550	请单击此处	请单击此处	请单击此处	请单击此处	请单击此处
THVD1551	请单击此处	请单击此处	请单击此处	请单击此处	请单击此处
THVD1552	请单击此处	请单击此处	请单击此处	请单击此处	请单击此处

13.4 接收文档更新通知

要接收文档更新通知，请转至 TI.com.cn 上您的器件的产品文件夹。请在右上角单击*通知我* 按钮进行注册，即可收到产品信息更改每周摘要（如有）。有关更改的详细信息，请查看任意已修订文档的修订历史记录。

13.5 社区资源

下列链接提供到 TI 社区资源的连接。链接的内容由各个分销商“按照原样”提供。这些内容并不构成 TI 技术规范，并且不一定反映 TI 的观点；请参阅 TI 的 《使用条款》。

TI E2E™ 在线社区 ***TI 的工程师对工程师 (E2E) 社区。***此社区的创建目的在于促进工程师之间的协作。在 e2e.ti.com 中，您可以咨询问题、分享知识、拓展思路并与同行工程师一道帮助解决问题。

设计支持 ***TI 参考设计支持*** 可帮助您快速查找有帮助的 E2E 论坛、设计支持工具以及技术支持的联系信息。

13.6 商标

E2E is a trademark of Texas Instruments.

13.7 静电放电警告

这些装置包含有限的内置 ESD 保护。 存储或装卸时，应将导线一起截短或将装置放置于导电泡棉中，以防止 MOS 门极遭受静电损伤。

13.8 术语表

SLYZ022 — *TI 术语表*。

这份术语表列出并解释术语、缩写和定义。

版权 © 2017–2018, Texas Instruments Incorporated

14 机械、封装和可订购信息

以下页面包含机械、封装和可订购信息。这些信息是指定器件的最新可用数据。数据如有变更，恕不另行通知，且不会对此文档进行修订。如需获取此数据表的浏览器版本，请查看左侧的导航栏。

PACKAGE OUTLINE

D0008B

SOIC - 1.75 mm max height

SOIC

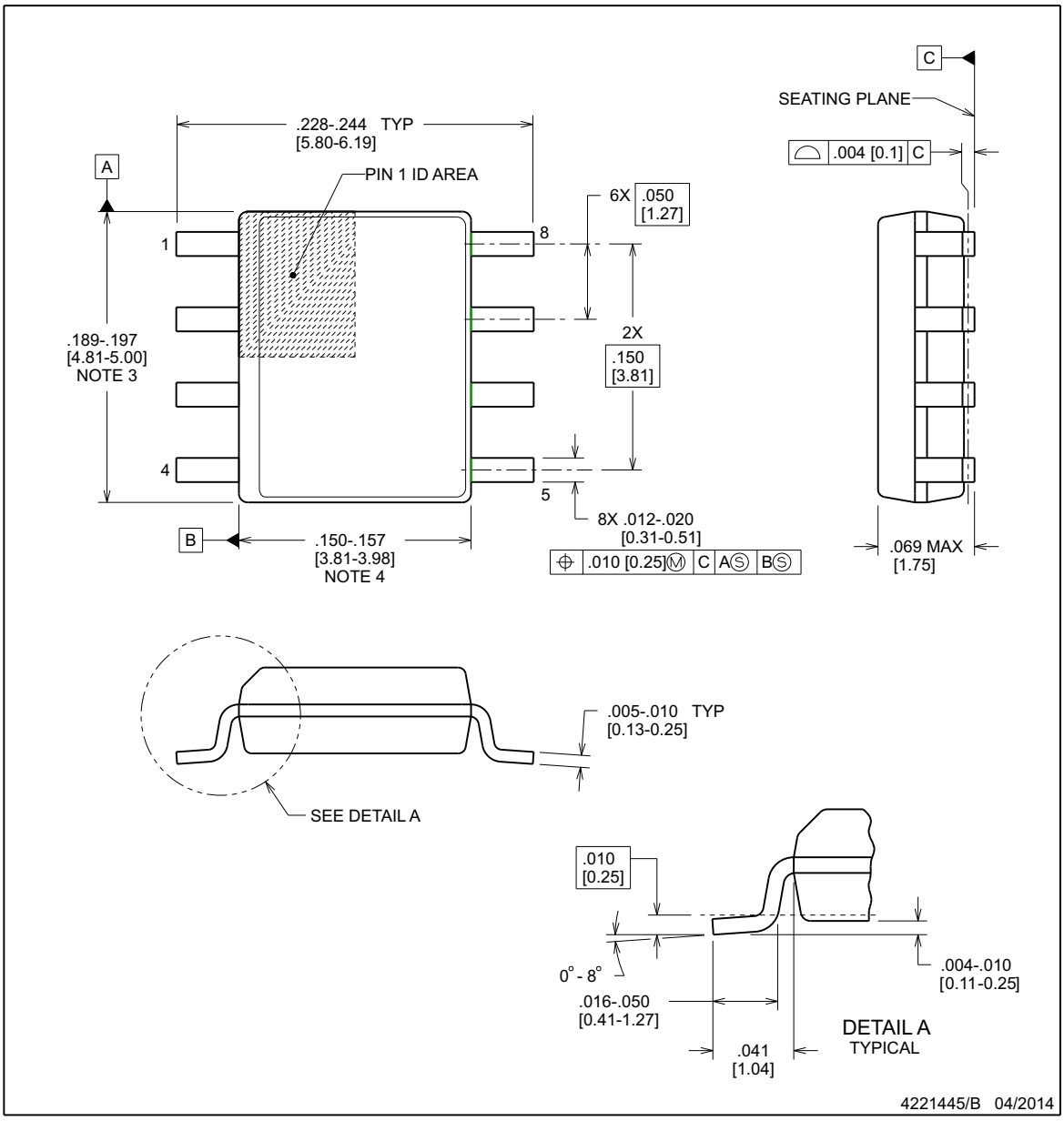

NOTES:

1. Linear dimensions are in inches [millimeters]. Dimensions in parenthesis are for reference only. Controlling dimensions are in inches. Dimensioning and tolerancing per ASME Y14.5M.
2. This drawing is subject to change without notice.
3. This dimension does not include mold flash, protrusions, or gate burrs. Mold flash, protrusions, or gate burrs shall not exceed .006 [0.15], per side.
4. This dimension does not include interlead flash.
5. Reference JEDEC registration MS-012, variation AA.

版权 © 2017–2018, Texas Instruments Incorporated

EXAMPLE BOARD LAYOUT

D0008B

SOIC - 1.75 mm max height

SOIC

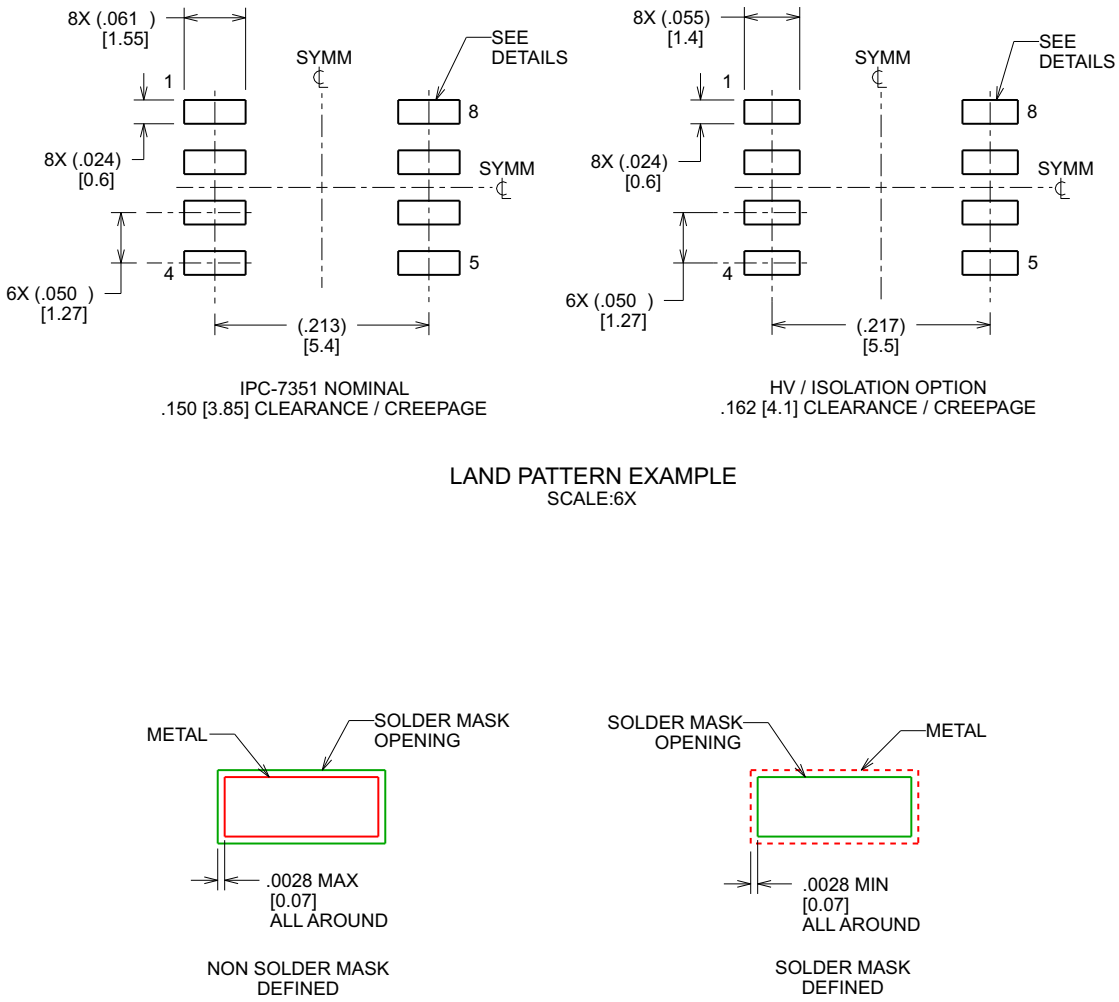

NOTES: (continued)

6. Publication IPC-7351 may have alternate designs.
7. Solder mask tolerances between and around signal pads can vary based on board fabrication site.

版权 © 2017–2018, Texas Instruments Incorporated

EXAMPLE STENCIL DESIGN

D0008B

SOIC - 1.75 mm max height

SOIC

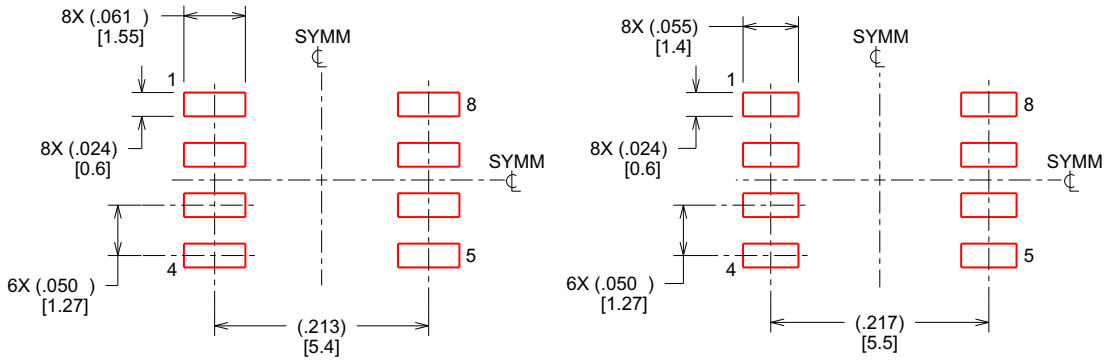

IPC-7351 NOMINAL
.150 [3.85] CLEARANCE / CREEPAGE

HV / ISOLATION OPTION
.162 [4.1] CLEARANCE / CREEPAGE

SOLDER PASTE EXAMPLE
BASED ON .005 INCH [0.127 MM] THICK STENCIL
SCALE:6X

4221445/B 04/2014

NOTES: (continued)

8. Laser cutting apertures with trapezoidal walls and rounded corners may offer better paste release. IPC-7525 may have alternate design recommendations.
9. Board assembly site may have different recommendations for stencil design.

版权 © 2017–2018, Texas Instruments Incorporated

MECHANICAL DATA

DGK (S–PDSO–G8) PLASTIC SMALL–OUTLINE PACKAGE

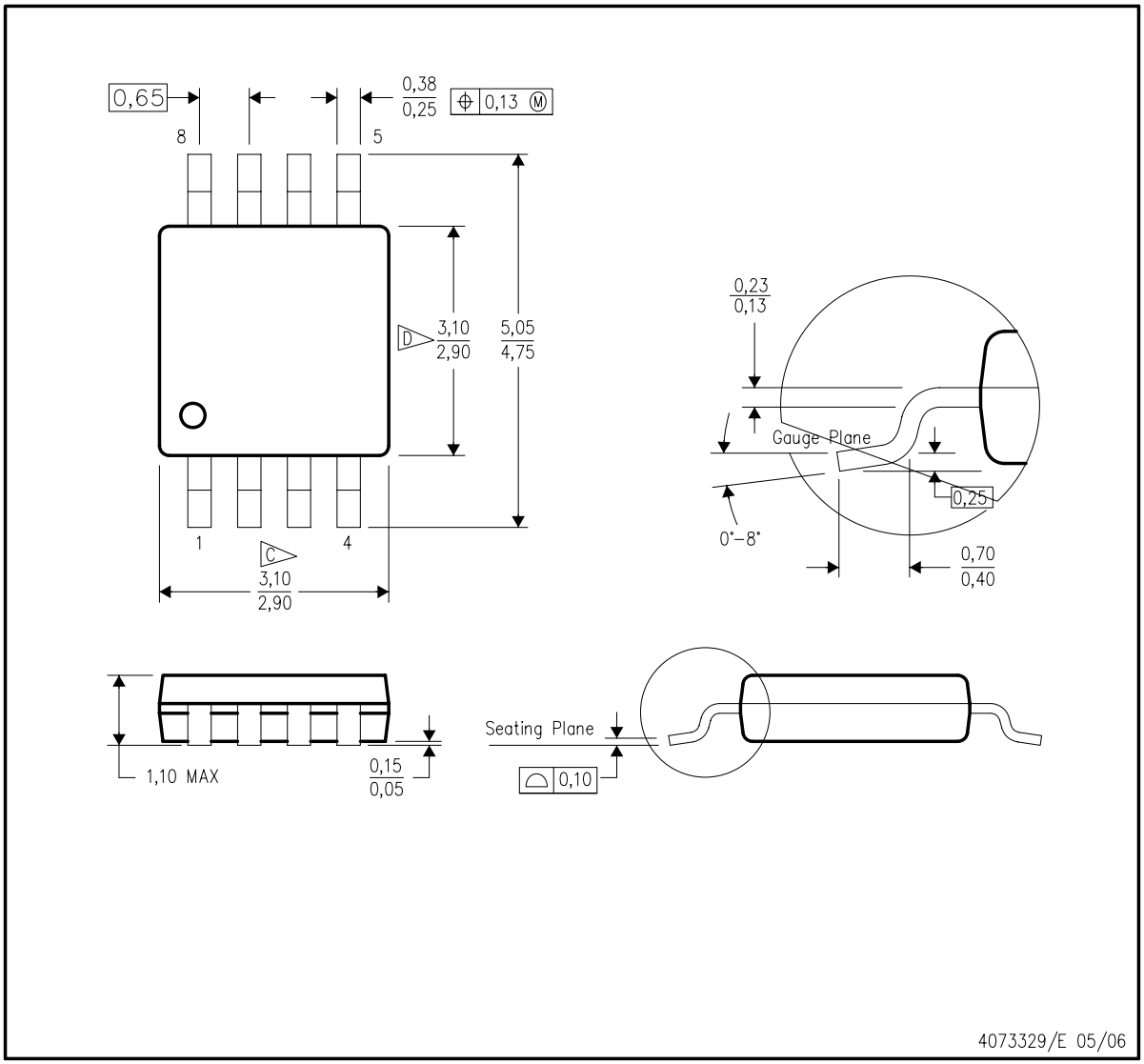

NOTES:
A. All linear dimensions are in millimeters.
B. This drawing is subject to change without notice.
C. Body length does not include mold flash, protrusions, or gate burrs. Mold flash, protrusions, or gate burrs shall not exceed 0.15 per end.
D. Body width does not include interlead flash. Interlead flash shall not exceed 0.50 per side.
E. Falls within JEDEC MO–187 variation AA, except interlead flash.

版权 © 2017–2018, Texas Instruments Incorporated

LAND PATTERN DATA

DGK (S-PDSO-G8) PLASTIC SMALL OUTLINE PACKAGE

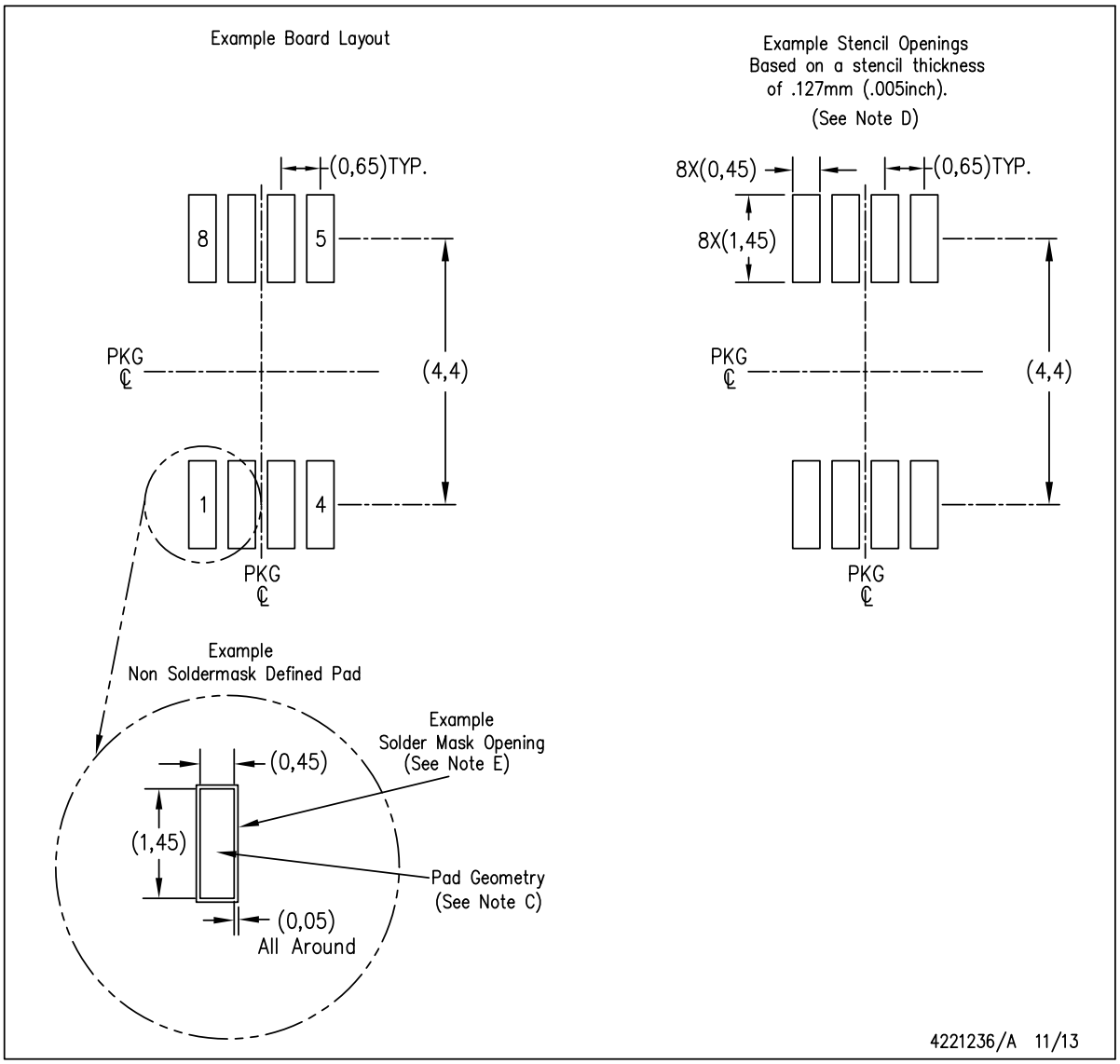

NOTES:
A. All linear dimensions are in millimeters.
B. This drawing is subject to change without notice.
C. Publication IPC-7351 is recommended for alternate designs.
D. Laser cutting apertures with trapezoidal walls and also rounding corners will offer better paste release. Customers should contact their board assembly site for stencil design recommendations. Refer to IPC-7525 for other stencil recommendations.
E. Customers should contact their board fabrication site for solder mask tolerances between and around signal pads.

版权 © 2017–2018, Texas Instruments Incorporated

LAND PATTERN DATA

DGK (S-PDSO-G8) PLASTIC SMALL OUTLINE PACKAGE

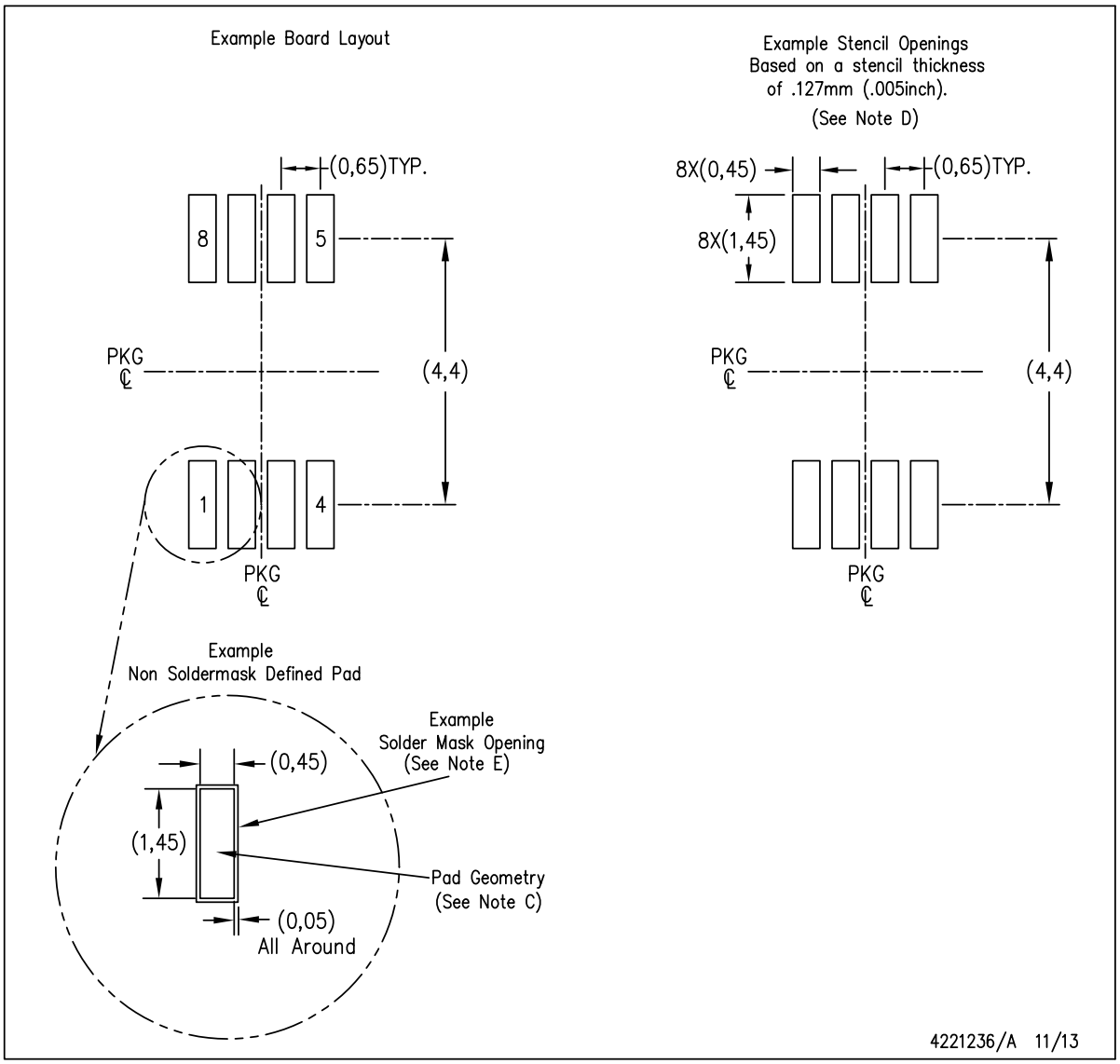

NOTES:
A. All linear dimensions are in millimeters.
B. This drawing is subject to change without notice.
C. Publication IPC-7351 is recommended for alternate designs.
D. Laser cutting apertures with trapezoidal walls and also rounding corners will offer better paste release. Customers should contact their board assembly site for stencil design recommendations. Refer to IPC-7525 for other stencil recommendations.
E. Customers should contact their board fabrication site for solder mask tolerances between and around signal pads.

版权 © 2017–2018, Texas Instruments Incorporated

PACKAGE OUTLINE

DGS0010A

VSSOP - 1.1 mm max height

SMALL OUTLINE PACKAGE

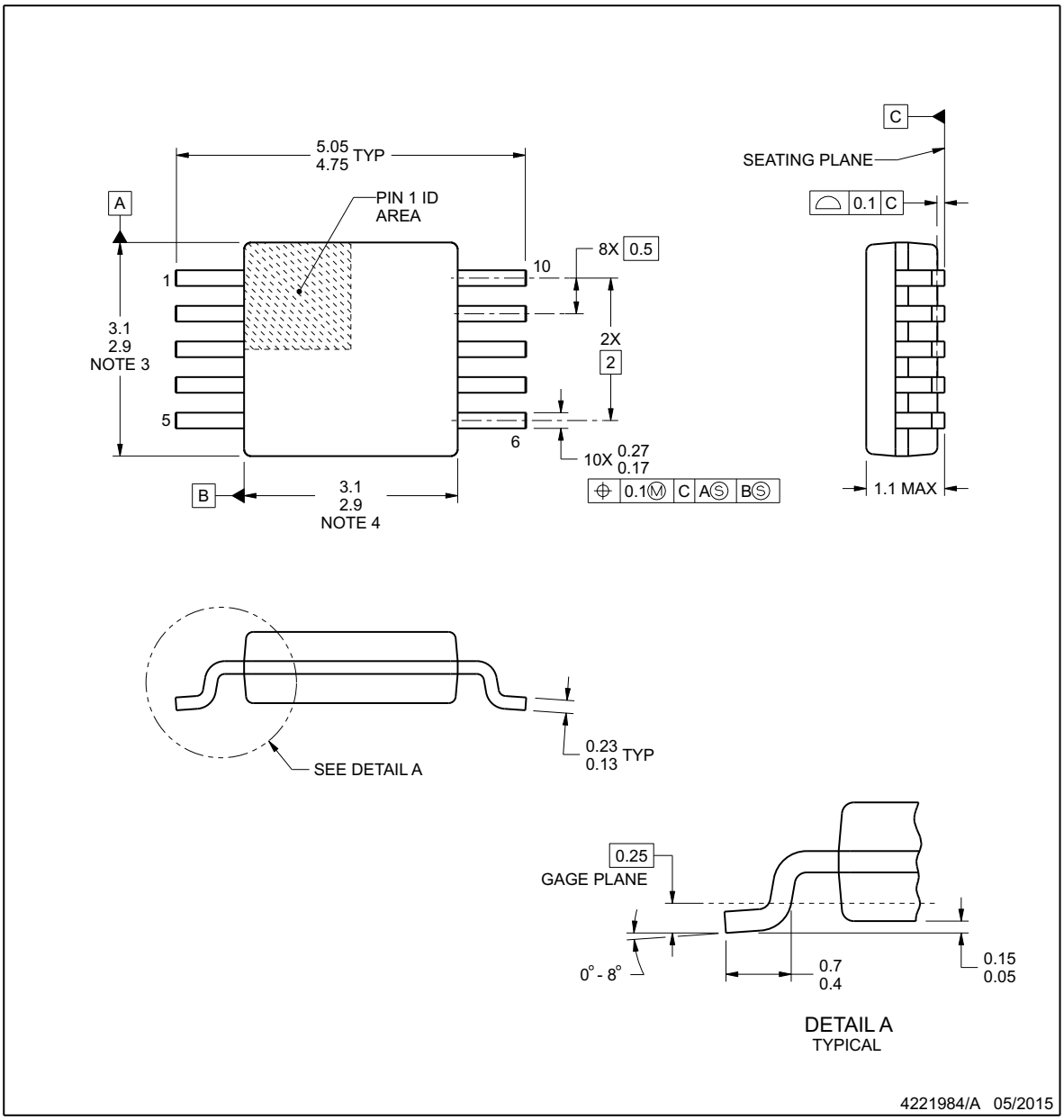

NOTES:

1. All linear dimensions are in millimeters. Any dimensions in parenthesis are for reference only. Dimensioning and tolerancing per ASME Y14.5M.
2. This drawing is subject to change without notice.
3. This dimension does not include mold flash, protrusions, or gate burrs. Mold flash, protrusions, or gate burrs shall not exceed 0.15 mm per side.
4. This dimension does not include interlead flash. Interlead flash shall not exceed 0.25 mm per side.
5. Reference JEDEC registration MO-187, variation BA.

版权 © 2017–2018, Texas Instruments Incorporated

EXAMPLE BOARD LAYOUT

DGS0010A

VSSOP - 1.1 mm max height

SMALL OUTLINE PACKAGE

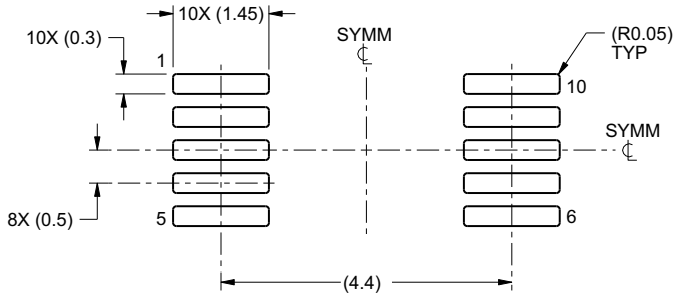

LAND PATTERN EXAMPLE
SCALE:10X

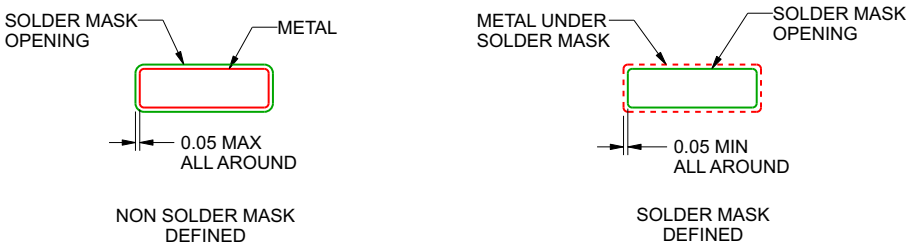

SOLDER MASK DETAILS
NOT TO SCALE

4221984/A 05/2015

NOTES: (continued)

6. Publication IPC-7351 may have alternate designs.
7. Solder mask tolerances between and around signal pads can vary based on board fabrication site.

版权 © 2017–2018, Texas Instruments Incorporated

EXAMPLE STENCIL DESIGN

DGS0010A

VSSOP - 1.1 mm max height

SMALL OUTLINE PACKAGE

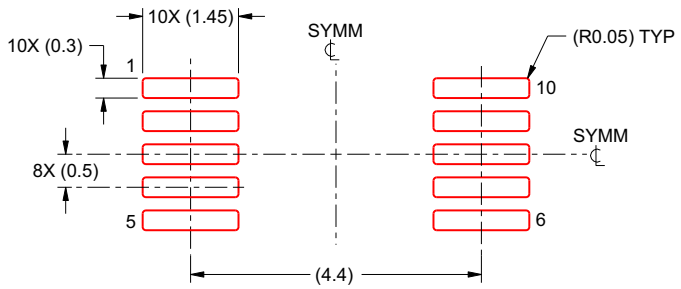

SOLDER PASTE EXAMPLE
BASED ON 0.125 mm THICK STENCIL
SCALE:10X

4221984/A 05/2015

NOTES: (continued)

8. Laser cutting apertures with trapezoidal walls and rounded corners may offer better paste release. IPC-7525 may have alternate design recommendations.
9. Board assembly site may have different recommendations for stencil design.

版权 © 2017–2018, Texas Instruments Incorporated

PACKAGING INFORMATION

Orderable Device	Status (1)	Package Type	Package Drawing	Pins	Package Qty	Eco Plan (2)	Lead finish/ Ball material (6)	MSL Peak Temp (3)	Op Temp (°C)	Device Marking (4/5)	Samples
THVD1510D	ACTIVE	SOIC	D	8	75	RoHS & Green	NIPDAU	Level-1-260C-UNLIM	-40 to 125	VD1510	Samples
THVD1510DGK	ACTIVE	VSSOP	DGK	8	80	RoHS & Green	NIPDAUAG	Level-1-260C-UNLIM	-40 to 125	1510	Samples
THVD1510DGKR	ACTIVE	VSSOP	DGK	8	2500	RoHS & Green	NIPDAUAG | SN	Level-1-260C-UNLIM	-40 to 125	1510	Samples
THVD1510DR	ACTIVE	SOIC	D	8	2500	RoHS & Green	NIPDAU	Level-1-260C-UNLIM	-40 to 125	VD1510	Samples
THVD1512DGS	ACTIVE	VSSOP	DGS	10	80	RoHS & Green	NIPDAUAG	Level-1-260C-UNLIM	-40 to 125	1512	Samples
THVD1512DGSR	ACTIVE	VSSOP	DGS	10	2500	RoHS & Green	NIPDAUAG | SN	Level-1-260C-UNLIM	-40 to 125	1512	Samples
THVD1550D	ACTIVE	SOIC	D	8	75	RoHS & Green	NIPDAU	Level-1-260C-UNLIM	-40 to 125	VD1550	Samples
THVD1550DGK	ACTIVE	VSSOP	DGK	8	80	RoHS & Green	NIPDAUAG	Level-1-260C-UNLIM	-40 to 125	1550	Samples
THVD1550DGKR	ACTIVE	VSSOP	DGK	8	2500	RoHS & Green	NIPDAUAG | SN	Level-1-260C-UNLIM	-40 to 125	1550	Samples
THVD1550DR	ACTIVE	SOIC	D	8	2500	RoHS & Green	NIPDAU	Level-1-260C-UNLIM	-40 to 125	VD1550	Samples
THVD1551DGK	ACTIVE	VSSOP	DGK	8	80	RoHS & Green	NIPDAUAG	Level-1-260C-UNLIM	-40 to 125	1551	Samples
THVD1551DGKR	ACTIVE	VSSOP	DGK	8	2500	RoHS & Green	NIPDAUAG | SN	Level-1-260C-UNLIM	-40 to 125	1551	Samples
THVD1552D	ACTIVE	SOIC	D	14	50	RoHS & Green	NIPDAU	Level-1-260C-UNLIM	-40 to 125	1552	Samples
THVD1552DGS	ACTIVE	VSSOP	DGS	10	80	RoHS & Green	NIPDAUAG	Level-1-260C-UNLIM	-40 to 125	1552	Samples
THVD1552DGSR	ACTIVE	VSSOP	DGS	10	2500	RoHS & Green	NIPDAUAG | SN	Level-1-260C-UNLIM	-40 to 125	1552	Samples
THVD1552DR	ACTIVE	SOIC	D	14	2500	RoHS & Green	NIPDAU	Level-1-260C-UNLIM	-40 to 125	1552	Samples

(1) The marketing status values are defined as follows:
ACTIVE: Product device recommended for new designs.
LIFEBUY: TI has announced that the device will be discontinued, and a lifetime-buy period is in effect.
NRND: Not recommended for new designs. Device is in production to support existing customers, but TI does not recommend using this part in a new design.
PREVIEW: Device has been announced but is not in production. Samples may or may not be available.
OBSOLETE: TI has discontinued the production of the device.

(2) **RoHS:** TI defines "RoHS" to mean semiconductor products that are compliant with the current EU RoHS requirements for all 10 RoHS substances, including the requirement that RoHS substance do not exceed 0.1% by weight in homogeneous materials. Where designed to be soldered at high temperatures, "RoHS" products are suitable for use in specified lead-free processes. TI may reference these types of products as "Pb-Free".
RoHS Exempt: TI defines "RoHS Exempt" to mean products that contain lead but are compliant with EU RoHS pursuant to a specific EU RoHS exemption.
Green: TI defines "Green" to mean the content of Chlorine (Cl) and Bromine (Br) based flame retardants meet JS709B low halogen requirements of <=1000ppm threshold. Antimony trioxide based flame retardants must also meet the <=1000ppm threshold requirement.

(3) MSL, Peak Temp. - The Moisture Sensitivity Level rating according to the JEDEC industry standard classifications, and peak solder temperature.

(4) There may be additional marking, which relates to the logo, the lot trace code information, or the environmental category on the device.

(5) Multiple Device Markings will be inside parentheses. Only one Device Marking contained in parentheses and separated by a "~" will appear on a device. If a line is indented then it is a continuation of the previous line and the two combined represent the entire Device Marking for that device.

(6) Lead finish/Ball material - Orderable Devices may have multiple material finish options. Finish options are separated by a vertical ruled line. Lead finish/Ball material values may wrap to two lines if the finish value exceeds the maximum column width.

Important Information and Disclaimer: The information provided on this page represents TI's knowledge and belief as of the date that it is provided. TI bases its knowledge and belief on information provided by third parties, and makes no representation or warranty as to the accuracy of such information. Efforts are underway to better integrate information from third parties. TI has taken and continues to take reasonable steps to provide representative and accurate information but may not have conducted destructive testing or chemical analysis on incoming materials and chemicals. TI and TI suppliers consider certain information to be proprietary, and thus CAS numbers and other limited information may not be available for release.

In no event shall TI's liability arising out of such information exceed the total purchase price of the TI part(s) at issue in this document sold by TI to Customer on an annual basis.

TAPE AND REEL INFORMATION

REEL DIMENSIONS

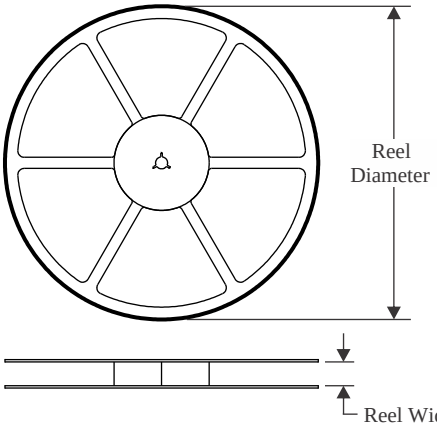

TAPE DIMENSIONS

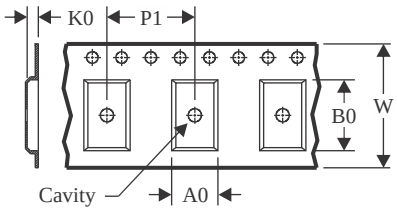

A0	Dimension designed to accommodate the component width
B0	Dimension designed to accommodate the component length
K0	Dimension designed to accommodate the component thickness
W	Overall width of the carrier tape
P1	Pitch between successive cavity centers

QUADRANT ASSIGNMENTS FOR PIN 1 ORIENTATION IN TAPE

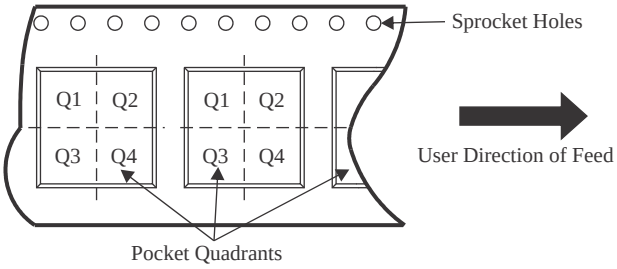

*All dimensions are nominal

Device	Package Type	Package Drawing	Pins	SPQ	Reel Diameter (mm)	Reel Width W1 (mm)	A0 (mm)	B0 (mm)	K0 (mm)	P1 (mm)	W (mm)	Pin1 Quadrant
THVD1510DGKR	VSSOP	DGK	8	2500	330.0	12.4	5.3	3.4	1.4	8.0	12.0	Q1
THVD1510DGKR	VSSOP	DGK	8	2500	330.0	12.4	5.3	3.4	1.4	8.0	12.0	Q1
THVD1510DR	SOIC	D	8	2500	330.0	12.4	6.4	5.2	2.1	8.0	12.0	Q1
THVD1512DGSR	VSSOP	DGS	10	2500	330.0	12.4	5.3	3.4	1.4	8.0	12.0	Q1
THVD1512DGSR	VSSOP	DGS	10	2500	330.0	12.4	5.3	3.4	1.4	8.0	12.0	Q1
THVD1550DR	SOIC	D	8	2500	330.0	12.4	6.4	5.2	2.1	8.0	12.0	Q1
THVD1552DGSR	VSSOP	DGS	10	2500	330.0	12.4	5.3	3.4	1.4	8.0	12.0	Q1
THVD1552DR	SOIC	D	14	2500	330.0	16.4	6.5	9.0	2.1	8.0	16.0	Q1

TAPE AND REEL BOX DIMENSIONS

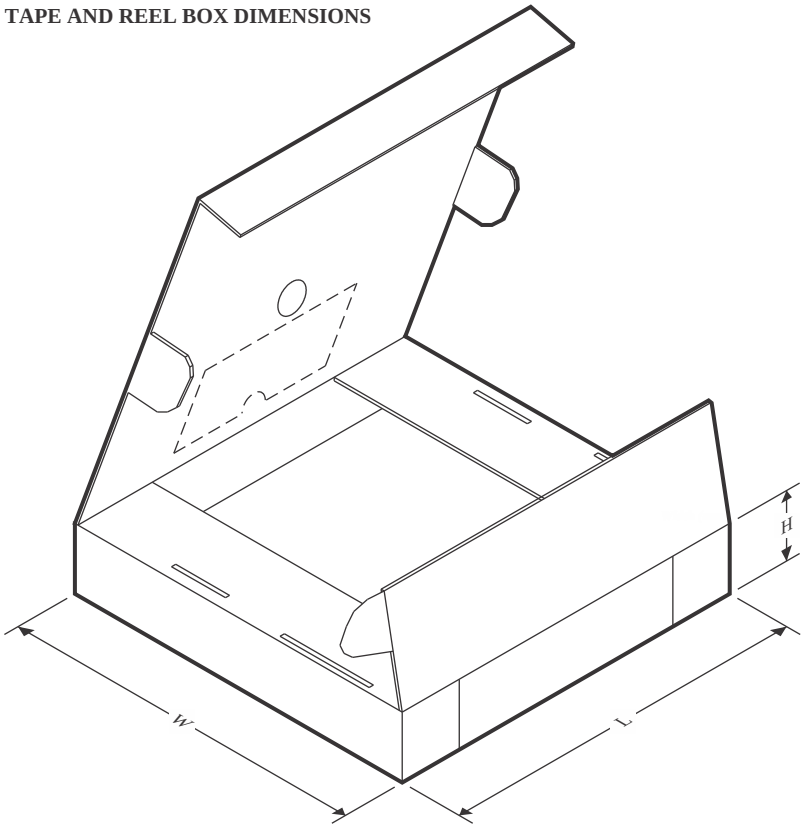

*All dimensions are nominal

Device	Package Type	Package Drawing	Pins	SPQ	Length (mm)	Width (mm)	Height (mm)
THVD1510DGKR	VSSOP	DGK	8	2500	364.0	364.0	27.0
THVD1510DGKR	VSSOP	DGK	8	2500	366.0	364.0	50.0
THVD1510DR	SOIC	D	8	2500	340.5	336.1	25.0
THVD1512DGSR	VSSOP	DGS	10	2500	366.0	364.0	50.0
THVD1512DGSR	VSSOP	DGS	10	2500	364.0	364.0	27.0
THVD1550DR	SOIC	D	8	2500	340.5	336.1	25.0
THVD1552DGSR	VSSOP	DGS	10	2500	364.0	364.0	27.0
THVD1552DR	SOIC	D	14	2500	340.5	336.1	32.0

TUBE

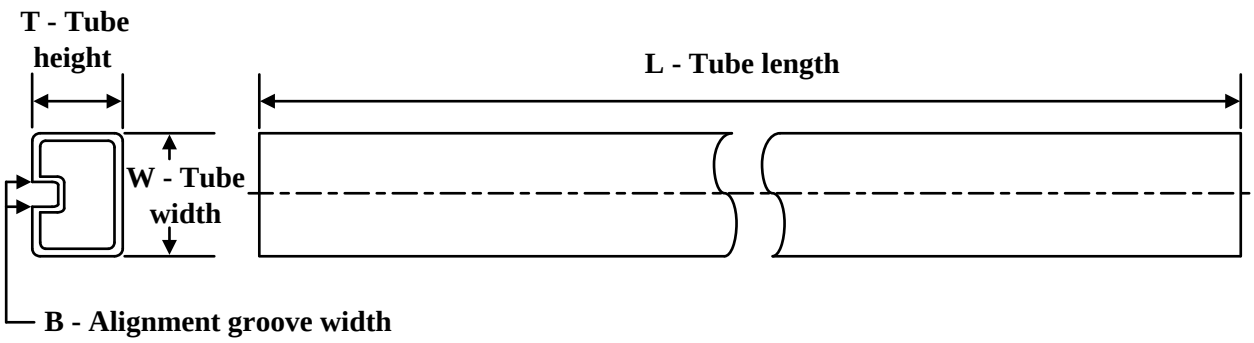

*All dimensions are nominal

Device	Package Name	Package Type	Pins	SPQ	L (mm)	W (mm)	T (µm)	B (mm)
THVD1510D	D	SOIC	8	75	507	8	3940	4.32
THVD1510DGK	DGK	VSSOP	8	80	330	6.55	500	2.88
THVD1512DGS	DGS	VSSOP	10	80	330	6.55	500	2.88
THVD1550D	D	SOIC	8	75	507	8	3940	4.32
THVD1550DGK	DGK	VSSOP	8	80	330	6.55	500	2.88
THVD1551DGK	DGK	VSSOP	8	80	274	6.55	500	2.88
THVD1552D	D	SOIC	14	50	507	8	3940	4.32
THVD1552DGS	DGS	VSSOP	10	80	330	6.55	500	2.88

重要声明和免责声明

TI“按原样”提供技术和可靠性数据（包括数据表）、设计资源（包括参考设计）、应用或其他设计建议、网络工具、安全信息和其他资源，不保证没有瑕疵且不做出任何明示或暗示的担保，包括但不限于对适销性、某特定用途方面的适用性或不侵犯任何第三方知识产权的暗示担保。

这些资源可供使用 TI 产品进行设计的熟练开发人员使用。您将自行承担以下全部责任：(1) 针对您的应用选择合适的 TI 产品，(2) 设计、验证并测试您的应用，(3) 确保您的应用满足相应标准以及任何其他功能安全、信息安全、监管或其他要求。

这些资源如有变更，恕不另行通知。TI 授权您仅可将这些资源用于研发本资源所述的 TI 产品的应用。严禁对这些资源进行其他复制或展示。您无权使用任何其他 TI 知识产权或任何第三方知识产权。您应全额赔偿因在这些资源的使用中对 TI 及其代表造成的任何索赔、损害、成本、损失和债务，TI 对此概不负责。

TI 提供的产品受 TI 的销售条款或 ti.com 上其他适用条款/TI 产品随附的其他适用条款的约束。TI 提供这些资源并不会扩展或以其他方式更改 TI 针对 TI 产品发布的适用的担保或担保免责声明。

TI 反对并拒绝您可能提出的任何其他或不同的条款。

邮寄地址：Texas Instruments, Post Office Box 655303, Dallas, Texas 75265
Copyright © 2023，德州仪器 (TI) 公司