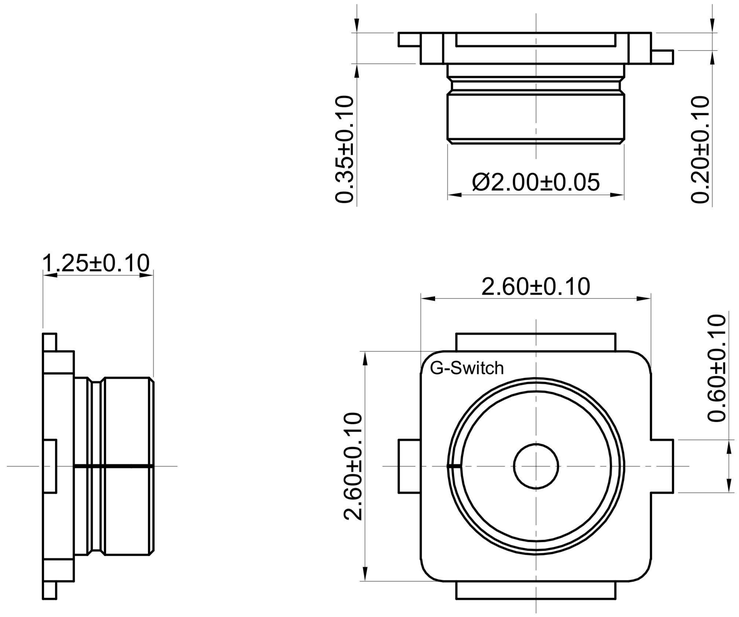

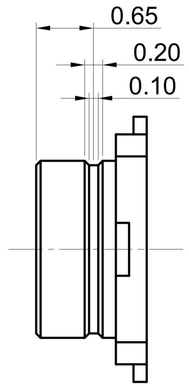

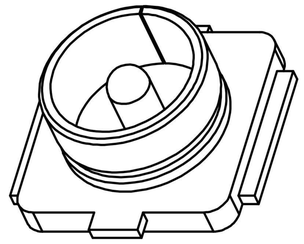

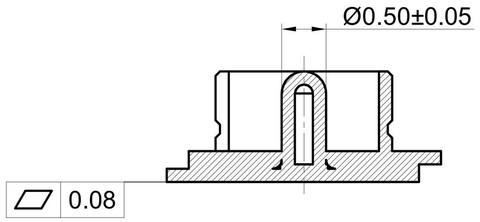

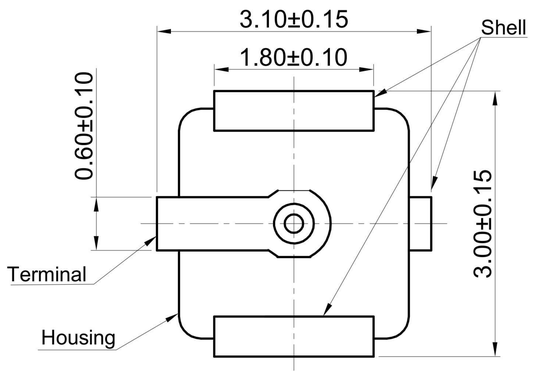

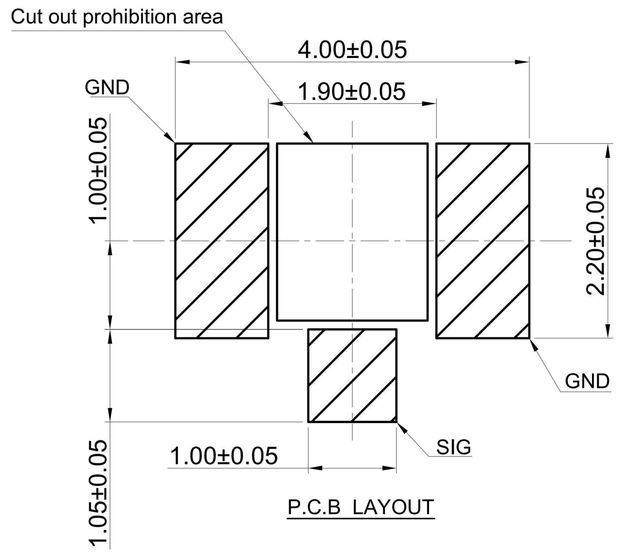

G-Switch RF Specification:

1.Contact Resistance: 20mΩ Max;
2.Dielectric Withstanging Voltage:
100V AC For 1 Minute;
3.Insulation Resistance: 1000MΩ Min;
4.Frequency Range: DC up to 6GHz
Vswr:1.3 Max. at 0~3GHz;
Vswr:1.3 Max. at 0~3GHz;
5.Operating Tempersture: -40 to +90 .

Item	Title	Material/Finish
1	Terminal	Copper Alloy/Gold Plated Over Ni
2	Shell	Copper Alloy/Gold Plated Over Ni
3	Housing	High Temp. Platic UL94V-0/Black

Pb Process Capable

RoHS Compliant 2002/95/EC

HALOGEN Compliant Halogen Free

SCALE: 9:1	UNIT: mm	Title:	RF I Receptacle Conn SMT 2.6×2.6×H1.25mm
SIZE: A4			
Unless otherwise General Tolerance: X. ±0.30, X.x ±0.20, X.xx ±0.15, X.xxx ±0.10, Angles ±3°		Molde Code:	GT-RF1125A-02G

DRAWN	CHECKED	APPROVED	DATE
Xia	Chen	Chen	2022.11.30

品赞科技 b-Switch ®

REV: A0 SHEET: 1/1