www.dzyjzj.com Tel:0755-27575531 Fax:0755-27576267

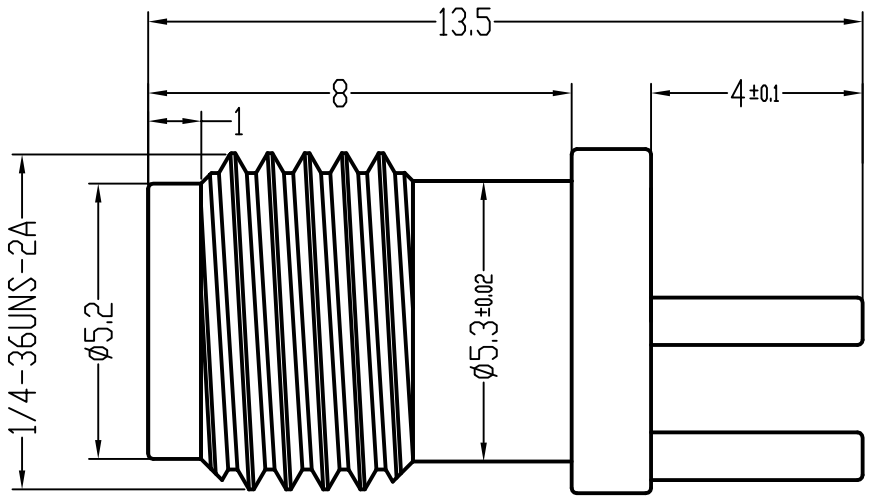

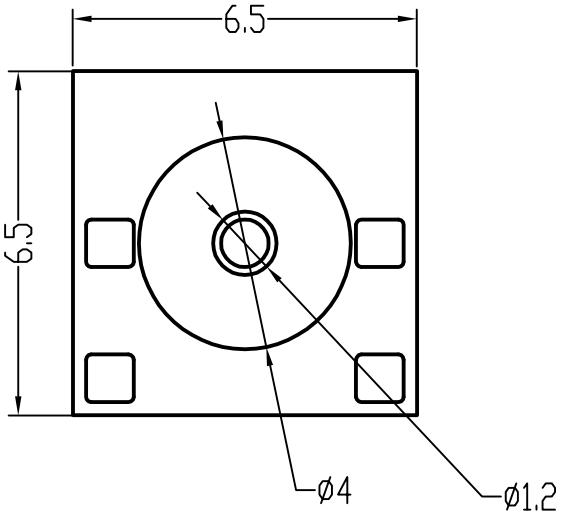

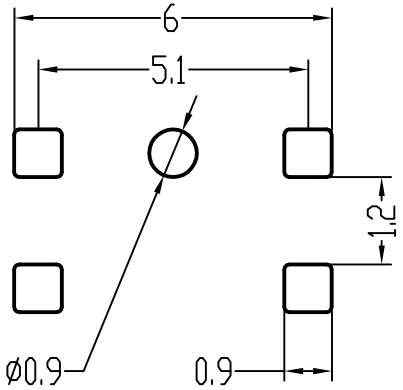

公差Tolerance	±0.05	±0.1	±0.2	±0.3	±0.5	±0.05	±0.5°
尺寸范围 Dimension Range	0-10	10-20	20-50	50-100	>100	D<20	0-180°
	线型/Linear					孔Hole	角度Angle
	未注尺寸公差/Tolerance unless specified						

深圳市华宇创精密电子有限公司

TOLERANCE: X.X ±0.30 X.XX ±0.25 X.XXX ±0.15 X.° ±2° X.X° ±0.5°	DRAWED BY : 陈一鸣	DATE : 2014-02-23	PART NAME: SMA 180 ° DIP 偏脚带孔夹1.2 L13.5
	CHECKED BY: 马跃	DATE : 2014-02-23	PART NO. HYCW21-SMAW0865-1350B
			MOLD NO.
UNIT: mm [inch]	APPROVED BY: 邱国夷	DATE : 2014-02-23	DRAW NO: HYC-2004081817
SCALE:1:1 SIZE: A4			SHEET NO. 1 OF 1