REV.	LOCAS.	DESCRIPTION	DRAW.	DATE.
01	NEW	INITIAL RELEASE.	Junly	2010.08.16
04	04	ECN20120030	Huang	2012.07.13
05	05	ECN20120035	Huang	2012.08.18
06	06	ECN20120039	Huang	2012.09.12
07	07	ECN20140018	Wang	2014.10.23

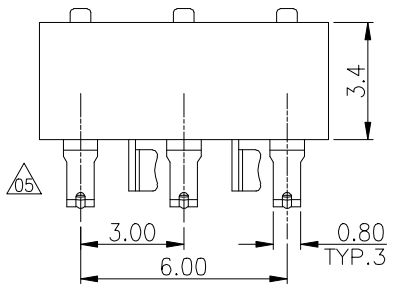

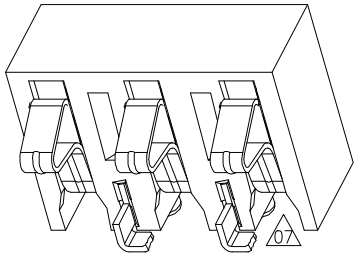

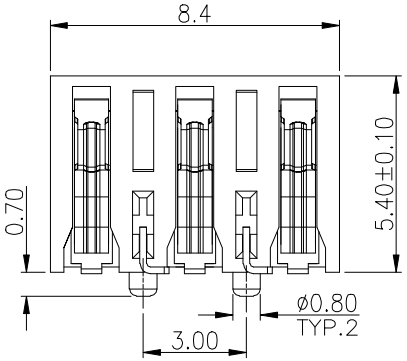

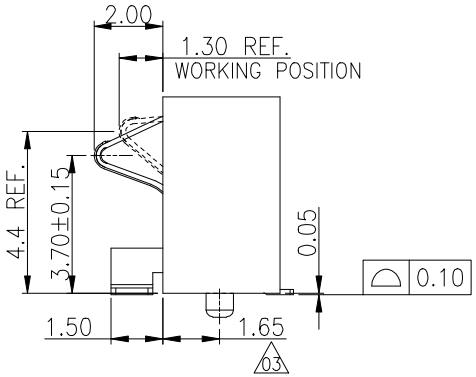

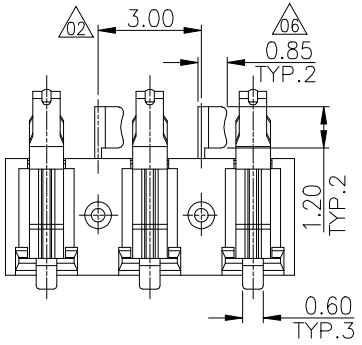

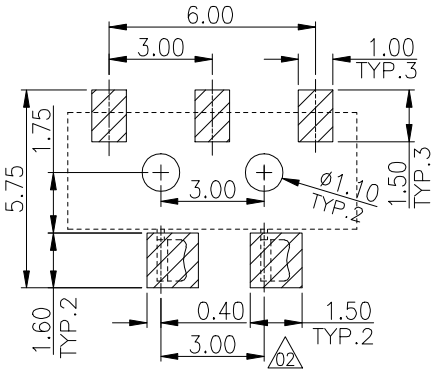

RECOMMENDED PCB LAYOUT

TOLERANCE:±0.05

NOTES:

1. MATERIAL:
   - 1.1 Housing:High Temperature Thermoplastic UL94V-0; Color Black.
   - 1.2 Terminal:Copper Alloy.
   - 1.3 Stator:Stainless Steel.
2. FINISH:
   - 2.1 Terminal: plated Au on contact area, plated Au on the solder tails, Underplated Nickel.
   - 2.2 Stator:Plated Tin over all, Underpalted Nickel.
3. SPECIALITY:
   - 3.1 Rated current:2.0A
   - 3.2 Rated voltage:30V
   - 3.3 Contact Resistance:50mΩ MAX
   - 3.4 Insulation Resistance:100MΩ MIN 100V DC
   - 3.5 Dielectric withstanding voltage: 100V AC.
   - 3.6 Solder ability:245±5℃, 5±0.5s.
   - 3.7 Durability:5000 Cycles Min.
   - 3.8 Operating condition:Temperature: -30℃~+80℃; Humidity: 80% R.H MAX

Ordering Information

B A 03 07 300 540 - 23

- B:Battery Series
- A:Finished Product
- No.of PINS:03(3PIN)
- Plating Number:
- 300:Pitch 3.00mm
- Product Height:
- Running number:

MEASURE POINT:
QUADRANT POINT (QP)
TANGERCY POINT (TP)
INTERSECTION POINT (IP)

UNLESS OTHERWISE SPECIFIED,TOLERANCE:

X.	±0.25
X.x	±0.20
X.xx	±0.15
ANGULAR	±3°

D-CHAIN

SHEN ZHEN D-CHAIN TECHNOLOGY CO.,LTD

DESIGN	Huang	DATE	2012.09.12	TITLE: 5.4H BATTERY 3PIN PH:3.0mm SMT TYPE WITH POST
CHECKED	Andy.L	DATE	2012.09.12	
APPROVED	Andy.L	DATE	2012.09.12	
PART NO:	BA0307300540-23	REV: 07	SCALE: 5:1	UNIT: mm
DRAWING NO:	DQBA0307300540-23	SIZE: A4	SHEET: 1/1	