REV.	DESCRIPTION OF REVISIONS	APPR.	CHKD.	DRAW.	DATE
X1	NEW REVISION				May.18.2018
X2					

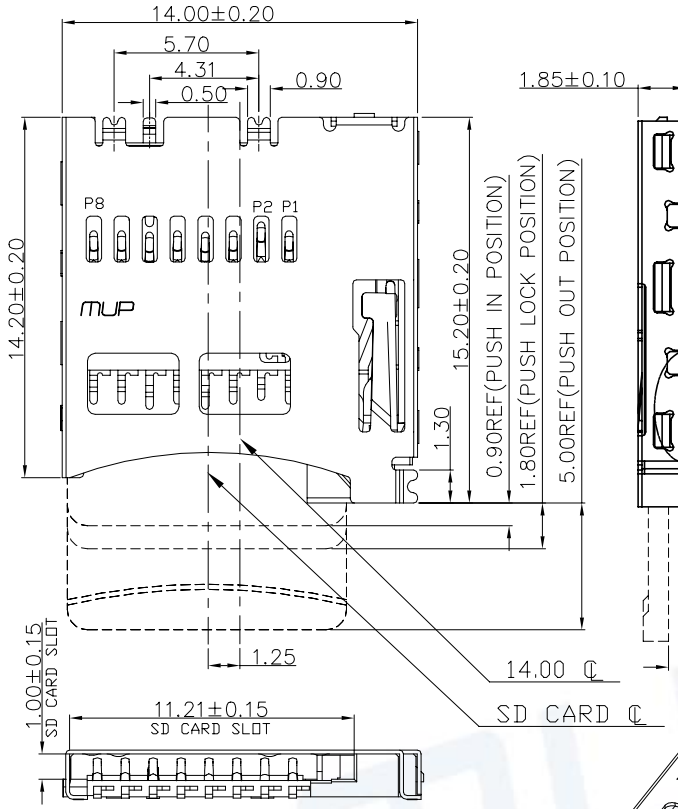

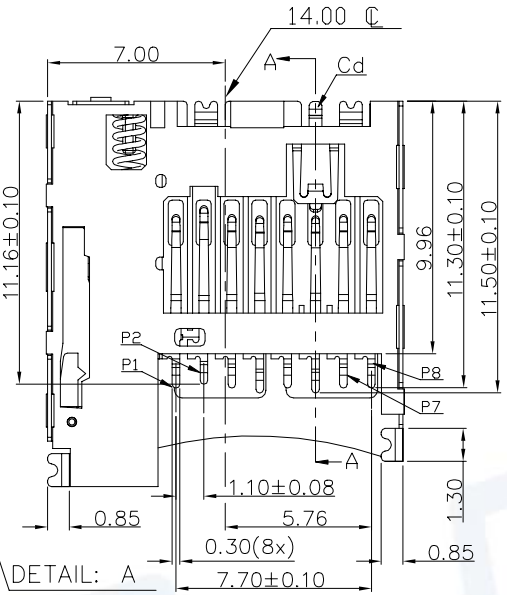

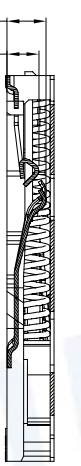

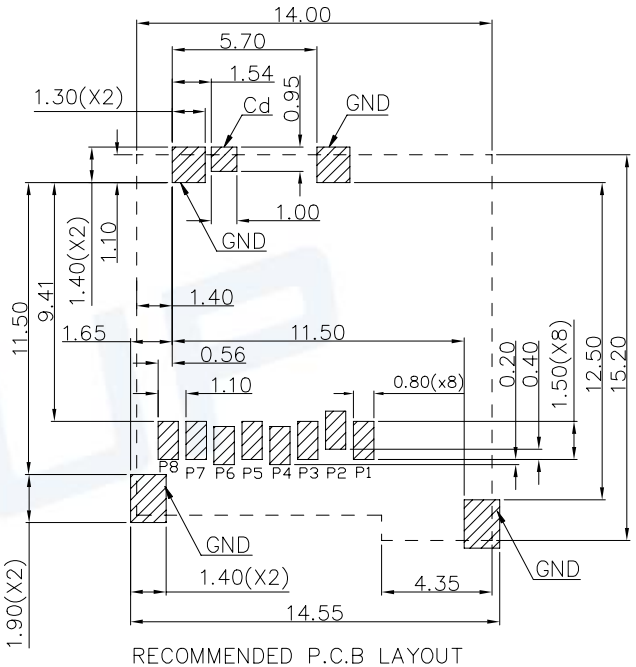

RECOMMENDED P.C.B LAYOUT
COMPONENT SIDE(TOLERANCE ±0.05)

PAD AREA
CONNECTOR OUTLINE
NO PATTERN AND VIA HOLE IN THIS AREA

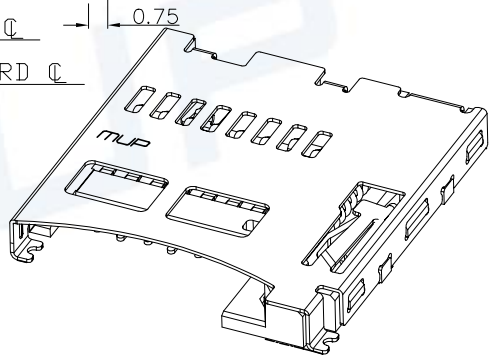

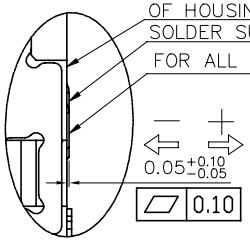

DETAIL A
SCALE 2:1

CIRCUIT DIAGRAM FOR DETECT SWITCHES

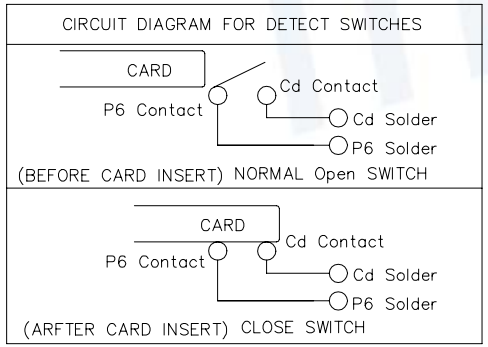

Pin No.	Pin assigenment	Pin No.	Pin assigenment
1	DAT2	5	CLK
2	CD/DAT3	6	VSS
3	CMD	7	DAT0
4	VDD	8	DAT1
Cd	CARD DETECION	GND	GROUND

TECHNICAL CHARACTERISTICS

1.General Characteristics
- Dimensions: 15.20LX14.0WX1.90H mm
- Weight: Approx 0.5g
- Durability: 5,000 cycles min.

2.Electrical Characteristics
- Contact resistance: 50mΩ typical,100mΩ max
- Insulation resistance: >1000MΩ/500V DC

3.Solderability
- Vapor phase: 215°C,30sec.Max
- IR reflow: 260°C,10sec.Max
- Manual soldering: 370°C,3sec.Max

4.Environmental Characteristics
- Operating temperature: −40°C~+85°C
- Operating humidity: 10%~+95%RH

Pb RoHS
PROCESS COMPLIANT

No.	DESCRIPTION	Q'TY	MATERIAL	FINISH
7	CD PIN	1	Copper Alloy	Contact area:Gold plated
6	CAM PIN	1	Stainless Steel	NO plating
5	HEART CAM	1	Hi–temp Thermoplastic	Black UL94V–0
4	SPRING	1	SWP.	Ni plating
3	SHELL	1	Stainless Steel	SMT area:Gold plated
2	TEMINAL	8	Copper Alloy	Contact area:Gold plated
1	HOUSING	1	Hi–temp Thermoplastic	Black UL94V–0

Unless otherwise specified, other tolerance are:

X	±0.35	X°	±5°
X.X	±0.25	X.X°	±4°
X.XX	±0.15	X.XX°	±3°
X.XXX	±0.10	X.XXX°	±2°

PROJ. | UNIT mm | SCALE 1:1

CUSTOMER DRAWING

MUP® MUP INDUSTRIAL CO.,LTD.

NAME: MicroSD CARD CONNECTOR

MODEL NO: MUP-M615-1
TYPE : With CD PIN

DRAWN	Henry May.18.2018	DWG NO.:	DWG-M615-1
CHECKED	Henry May.18.2018	SHEET 1/1	REVISION X1
APPROVAL	Simon May.18.2018		