REV.	DESCRIPTION OF REVISIONS	APPR.	DRAW.	RELEASE	DATE
X1					

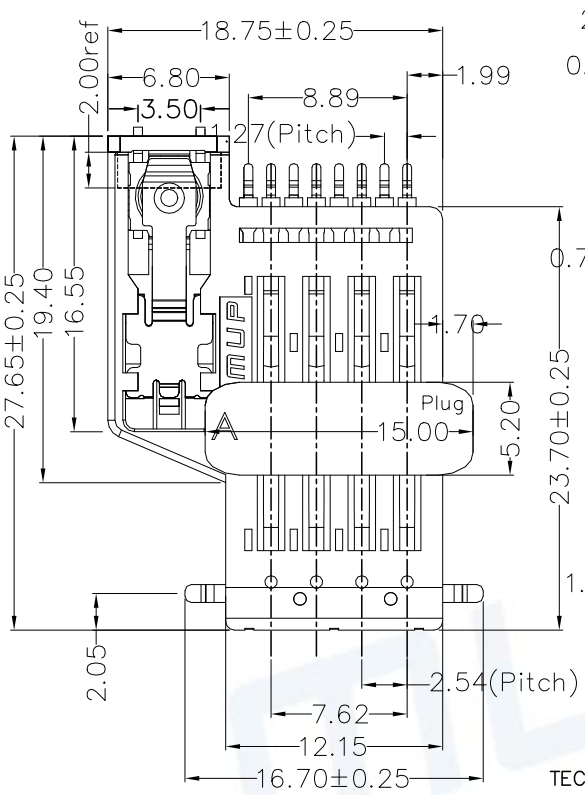

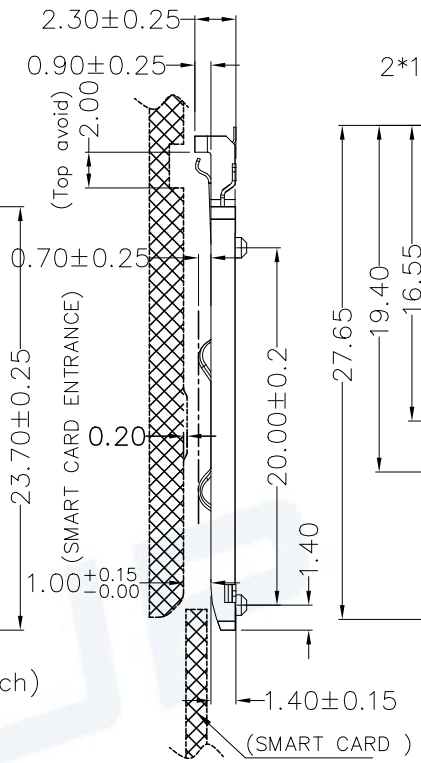

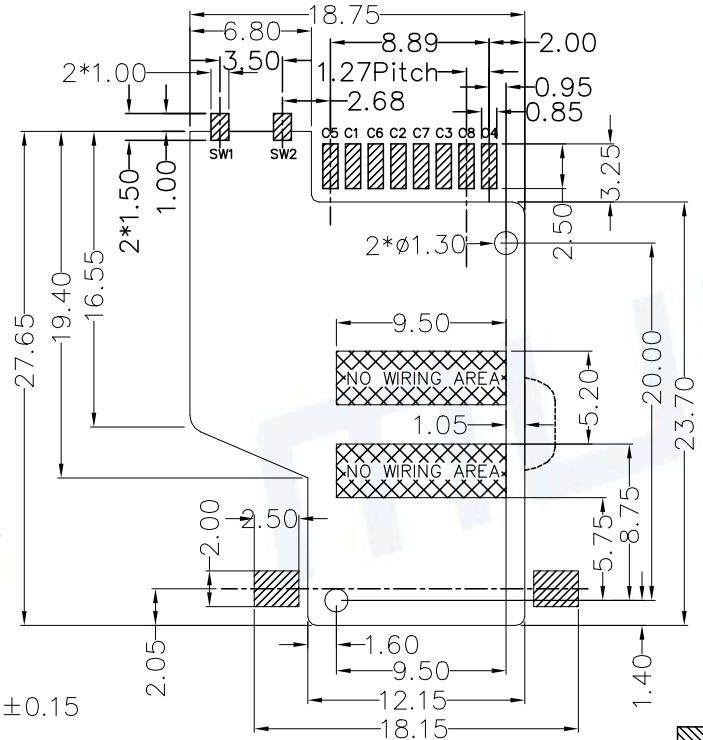

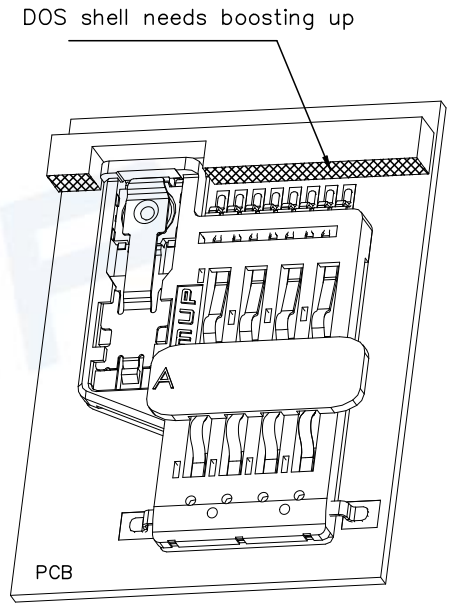

RECOMMENDED P.C.B LAYOUT
COMPONENT SIDE(TOLERANCE ±0.05)
Coplanarity of metal solder pins 0.12mm
Recommendating of solder paste thickness > 0.15mm

PAD AREA
STAND OFF AREA

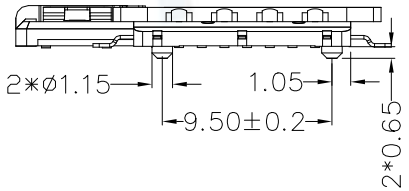

ELECTRIC FUNCTION	DETECT SWITCH
WITHOUT CARD	OPEN
CARD INSERTED	CLOSED

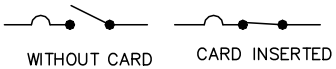

SWITCH OPERATION DIAGRAM

TECHNICAL CHARACTERISTICS

1.General Characteristics

Dimensions: 27.65LX18.75WX1.40H mm

Weight: Approx0.85±0.3g

Durability: 300,000 cycles min
(The height of the bayonet directly affects the service life)

2.Electrical Characteristics

Contact resistance: 50mΩ typical,100mΩ max

Insulation resistance: >1000MΩ/500V DC

Switch Contact resistance: 100mΩ typical,200mΩ max

Switch Insulation resistance: 100MΩ min

3.Solderability

Vapor phase: 215°C.30sec.Max

IR reflow: 260°C.10sec.Max

Manual soldering: 370°C,3sec.Max

4.Environmental Characteristics

Operating temperature: −40°C~+85°C

Operating humidity: 10%~+95%RH

Pb RoHS
PROCESS COMPLIANT

ITEM	PART NAME	Q'TY	MATERIAL	FINISH
1	BASE	1	Hi−temp Thermoplastic	Black UL94V−0
2	DATA CONTACT	8	Copper Alloy	Contact area:Gold plated
3	SWITCH CONTACT	1		Contact area:Silver plated
4	LATCH	1	Brass	Plated: Tin over all
5	FLAKE	1	SUS	

Unless otherwise specified, other tolerance are:

X	±0.35	X°	±5°
X.X	±0.25	X.X°	±4°
X.XX	±0.15	X.XX°	±3°
X.XXX	±0.10	X.XXX°	±2°

PROJ. | UNIT mm | SCALE 1:1

CUSTOMER DRAWING

MUP® MUP INDUSTRIAL CO.,LTD.

NAME: **Smart Card Acceptor**

MODEL NO: **MUP-C7309-1 H1.40mm**

TYPE : **Normally open (Sealed SW)**

DRAWN	Zoey	2020.11.04	DWG NO.: DWG−MUP−C7309−001
CHECKED	Keey	2020.11.04	SHEET 1/1
APPROVAL	Simon	2020.11.04	REVISION X1