修订 REV	标记 MARK	修改摘要 REVISION DESCRIPTION	签名 SIGNA TURE	日期 DATE
A0		NEW RELEEASE	WANG	2015-12-16

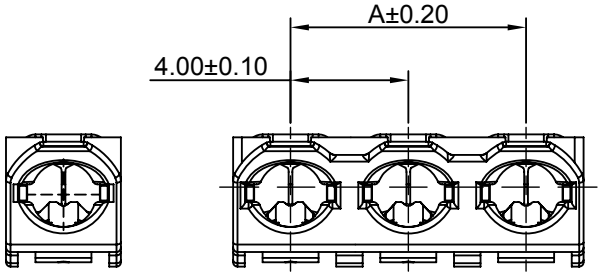

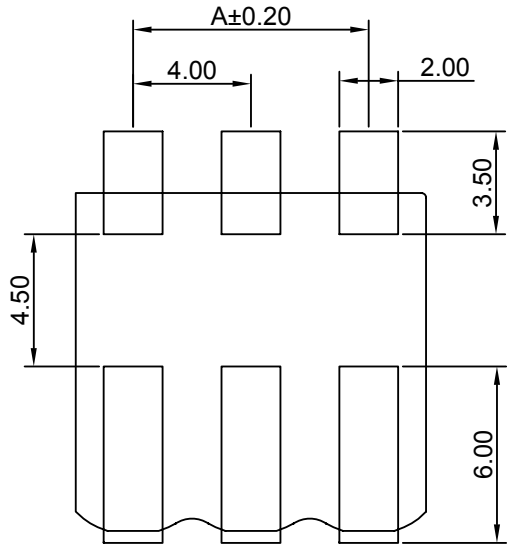

PCB LAYOUT

Ordering Information:

HDGC4001SMD-S-XP - **
1 2

1.Part No
2.Style:
(blank) :LCP,UL94V-0
6T :PA6T+30%GF,UL94V-0

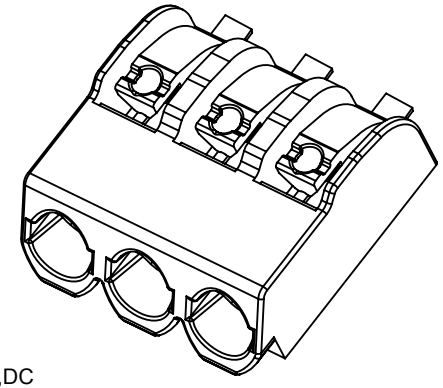

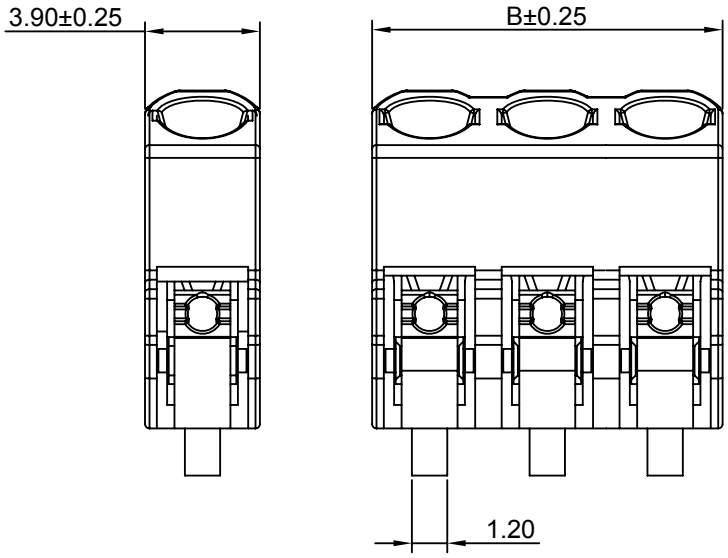

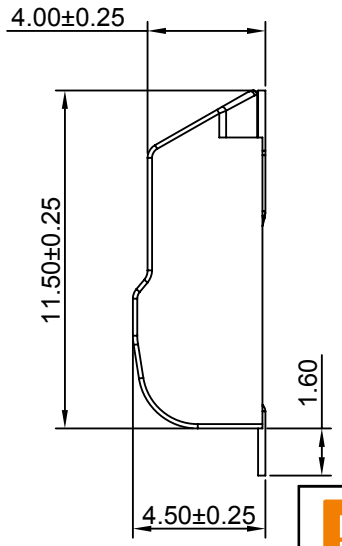

SPECIFICATIONS:
Current Rating: 9A AC,DC
Voltage Rating: 320V AC,DC
Temperature Range: -25°C ~ +85°C
Contact Resistance: 20mΩ Max.
Insulation Resistance: 500MΩ Min.
Withstanding Voltage: 2500V AC/minute
Pin Material: Copper Alloy /Tin-Plated
Material: LCP ,UL94V-0 (Light Gray)

Ordering Information & Dimensions

Circuits	Dimensions(mm)		Circuits	Dimensions(mm)	
	A	B		A	B
1P	---	3.90	3P	8.00	11.90
2P	4.00	7.90			

深圳市华德共创科技有限公司
SHENZHEN HUADE CO-CREATE TECHNOLOGY CO.,LTD
TEL：0755-27111225 FAX：0755-29940187

-TOLERANCES- UNLESS OTHERWISE SPECIFIED 公差参数表									
X.X	±0.30	X.X°	±3°	APPD: 核准：	XIE	TITLE: 产品名称：	4.00mm Pitch Wafer-SMT TYPE		
X.XX	±0.30	X.XX°	±2°	CHECK: 校对：	WANG	DATE	SCALE	UNIT	CODE NUMBER
X.XXX	±0.10	X.XXX°	±1°	DRAW: 绘图：	WANG	2015-12-16	4:1	mm	A008
						PART NO: 产品编号：	HDGC4001SMD-S-XP		