THIS DRAWING IS UNPUBLISHED. RELEASED FOR PUBLICATION 20
© COPYRIGHT 20 BY - ALL RIGHTS RESERVED.

REVISIONS					
P	LTR	DESCRIPTION	DATE	DWN	APVD
	E7	REVISED PER ECO-16-007761	20MAY2016	DLD	WEM
	E8	REVISED PER ECO-17-006621	09MAY2017	DLD	WEM
	E9	REVISED PER ECO-20-012412	08SEP2020	AP	HDC

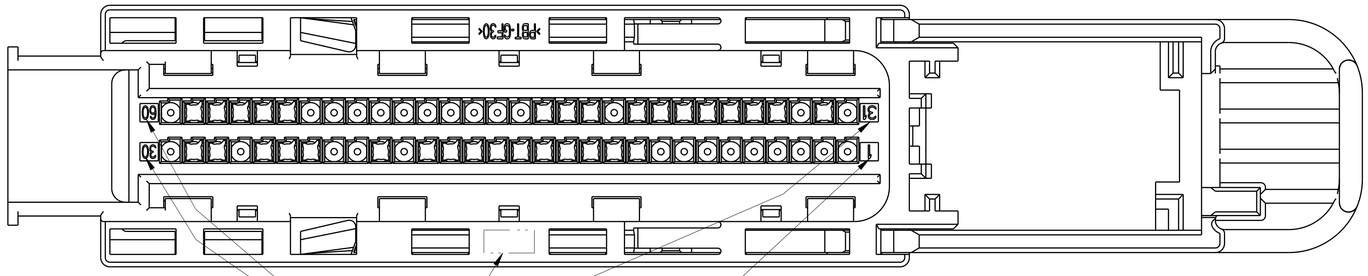

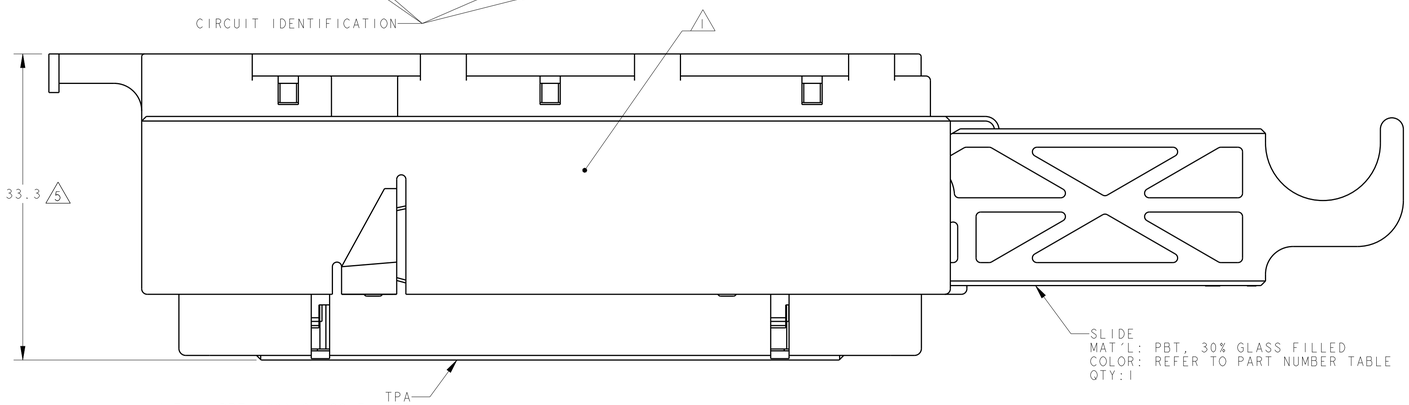

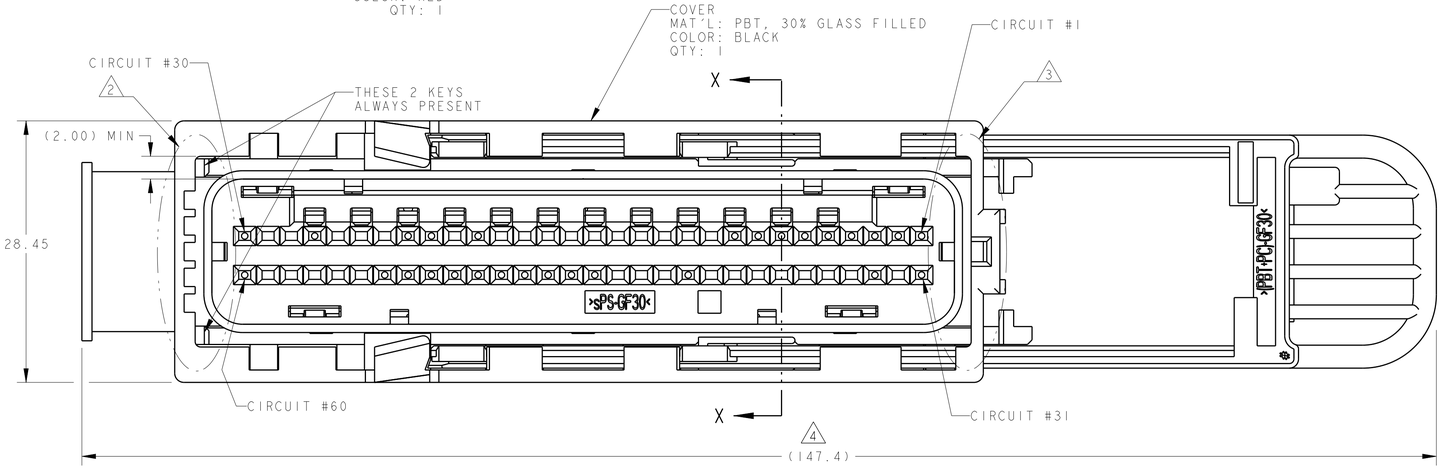

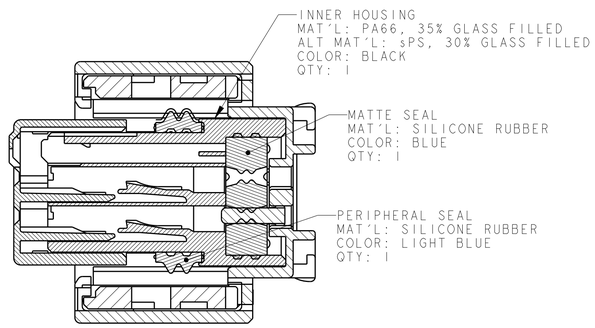

SECTION X-X

P/N 2-1438521-1 ONLY
WITH CPA

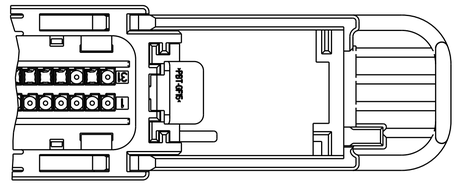

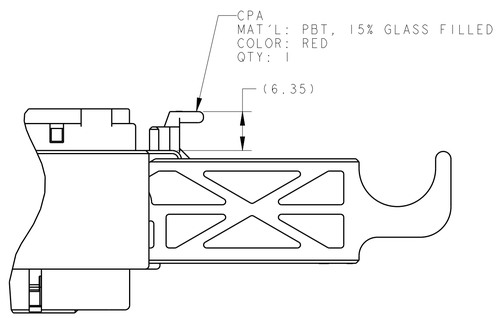

SCALE 2:1

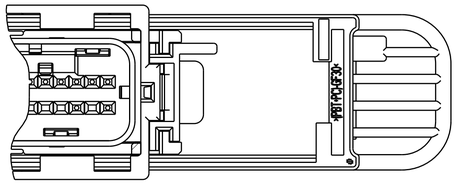

1. TE CONNECTIVITY (TE) PART NUMBER AND JULIAN DATE CODE MARKED ON THIS SIDE.
2. KEYING ARRANGEMENT TABLE FOR KEYWAY LOCATIONS, SEE SHEET 2.
3. KEYING ARRANGEMENT TABLE FOR KEY LOCATIONS, SEE SHEET 2.
4. SLIDE SHOWN IN UNLOCKED POSITION.
5. TPA SHOWN IN UNLOCKED POSITION.
6. MISCELLANEOUS COMPONENT ENGAGE/DISENGAGE FORCE, SAE/USCAR-2, SECTION 5.4.4.4. TPA (PRE-SET TO FULL) FORCES (15 TO 55 NEWTONS)
7. APPLICABLE TE GET FEMALE TERMINALS:
   FOR 0.22/0.35 WIRE SECTION,
   TERMINAL PART NUMBER 1393364-2 (GOLD)
   FOR 0.50/0.0.75 WIRE SECTION,
   TERMINAL PART NUMBER 1393365-2 (GOLD)
   FOR 0.22/0.35 WIRE SECTION,
   TERMINAL PART NUMBER 1393367-1 (TIN)
   FOR 0.50/0.0.75 WIRE SECTION,
   TERMINAL PART NUMBER 1393366-1 (TIN)
8. REFER TO POGO PIN FOR GET SOCKET TERMINAL ON TE DRAWING #114-18411 FOR CONTINUITY TESTING.
9. NOT FOR PRODUCTION USE.
10. CPA ASSEMBLED IN UNLOCKED POSITION.

	SLIDE COLOR	CIRCUIT ARRANGEMENT (SEE TABLE ON SHEET 2)	KEYING ARRANGEMENT (SEE TABLE ON SHEET 2)	PART NUMBER
9	BLACK	C3	K99	9-1438521-8
	BLACK	C143	K1	2-1438521-8
	BLACK	C142	K1	2-1438521-7
	BLACK	C141	K1	2-1438521-6
	BLACK	C140	K1	2-1438521-5
	BLACK	C139	K1	2-1438521-4
	BLACK	C138	K1	2-1438521-2
10	BLACK	C137	K1	2-1438521-1
	BLACK	C136	K1	2-1438521-0
	BLACK	C132	K1	1-1438521-7
	BLACK	C131	K1	1-1438521-6
	BLACK	C129	K1	1-1438521-5
	BLACK	C128	K1	1-1438521-4
	BLACK	C127	K1	1-1438521-3
	BLACK	C122	K1	1-1438521-2
	BLACK	C115	K1	1-1438521-1
	BLACK	C109	K1	1-1438521-0
OBSOLETE	BLACK	C108	K1	~~1438521-9~~
	BLACK	C107	K1	1438521-8
OBSOLETE	GRAY	C75	K1	~~1438521-7~~
OBSOLETE	BLACK	C74	K1	~~1438521-6~~
	BLACK	C73	K1	1438521-5
	BLACK	C62	K1	1438521-4
	BLACK	C61	K1	1438521-3
	BLACK	C49	K1	1438521-2
	BLACK	C3	K1	1438521-1

SEE SHEET 2 FOR HEADER INTERFACE SPECIFICATION
AND SHEET 3 FOR KEYING AND CIRCUIT ARRANGEMENTS

THIS DRAWING IS A CONTROLLED DOCUMENT.

DIMENSIONS: mm

TOLERANCES UNLESS OTHERWISE SPECIFIED:
0 PLC ±-
1 PLC ±0.5
2 PLC ±0.20
3 PLC ±-
4 PLC ±-
ANGLES ±-

MATERIAL: SEE CALLOUT
FINISH: SEE CALLOUT

DWN DL DRUMMOND 11FEB2005
CHK AJ VALASEK 11FEB2005
APVD AJ VALASEK 11FEB2005
PRODUCT SPEC -
APPLICATION SPEC 114-13060
WEIGHT -

TE Connectivity

NAME: ASSEMBLY, FEMALE, 60 WAY GET, TCM, CONNECTOR

SIZE A1 | CAGE CODE 00779 | DRAWING NO C-1438521 | RESTRICTED TO -

CUSTOMER DRAWING | SCALE 1:1 | SHEET 1 OF 3 | REV E9

4805 (3/13)

THIS DRAWING IS UNPUBLISHED. RELEASED FOR PUBLICATION 20
© COPYRIGHT 20 BY - ALL RIGHTS RESERVED.

APPLICABLE HEADER INTERFACE SPECIFICATION

SHOWN WITH KEYING OPTION K1
SCALE 3:1

REVISIONS					
P	LTR	DESCRIPTION	DATE	DWN	APVD
	-	SEE SHEET 1	-	-	-

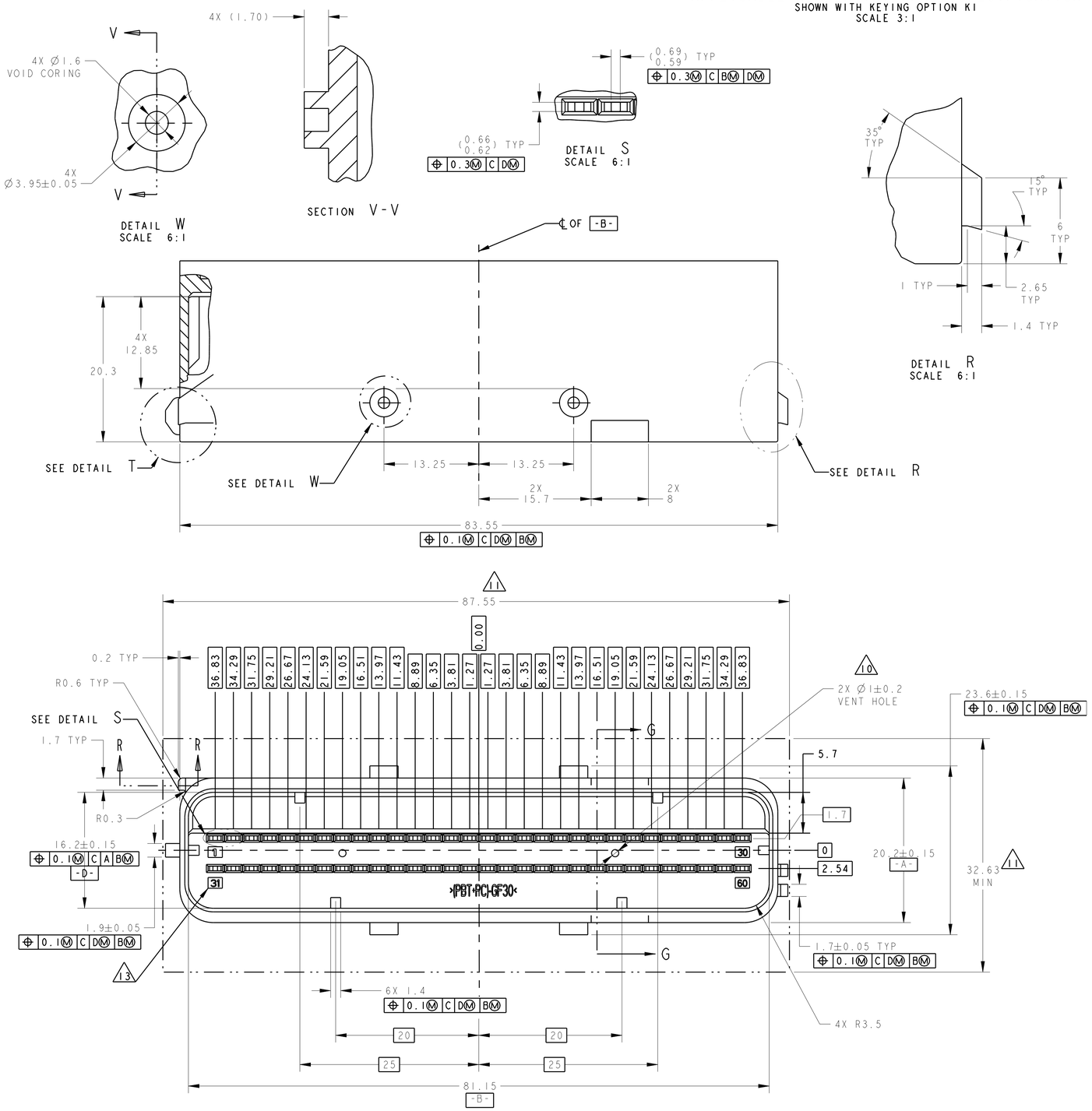

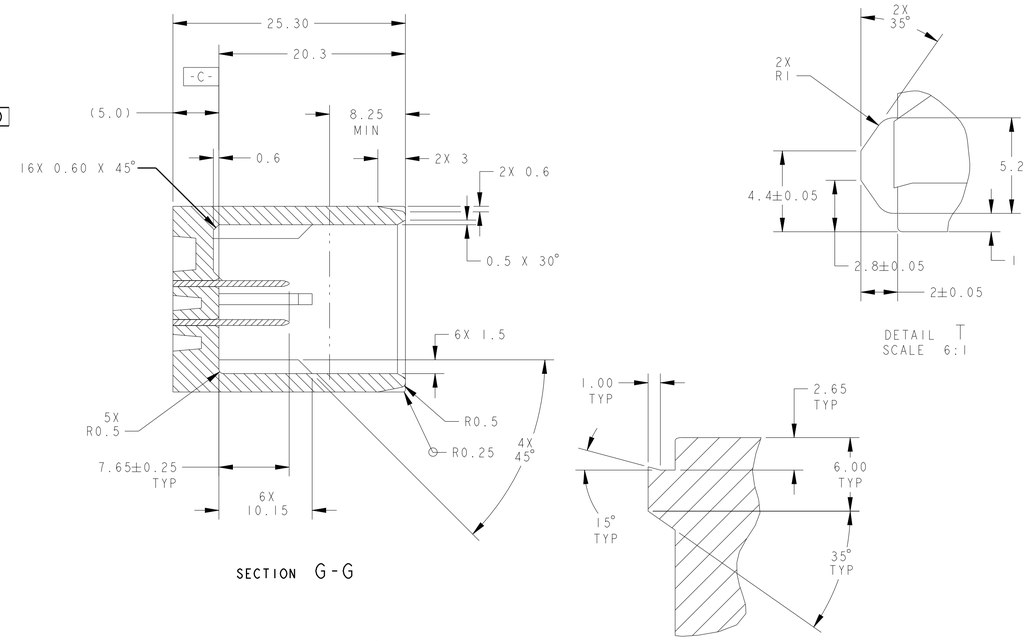

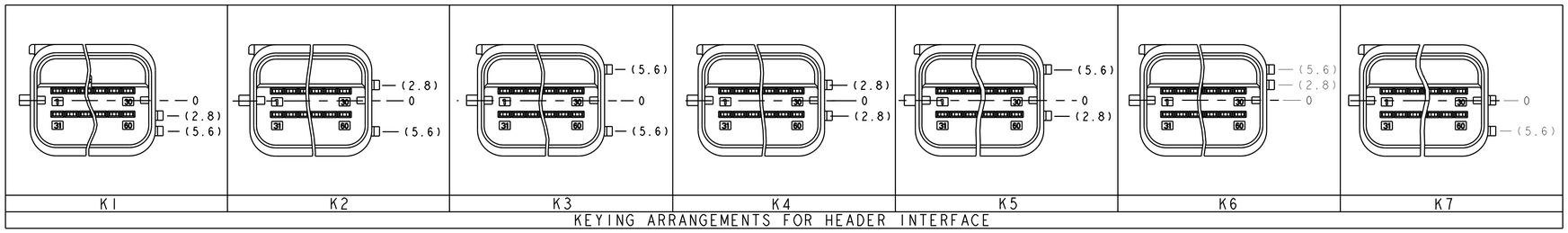

KEYING ARRANGEMENTS FOR HEADER INTERFACE

NOTE(S): UNLESS OTHERWISE SPECIFIED

1. PART MUST CONFORM TO THE LATEST LEVEL OF USCAR DATED 951010.
2. ALL PLASTIC PARTS MUST HAVE MATERIAL IDENTIFICATION SYMBOLS CLEARLY MARKED, WHEREVER PACKAGE SIZE PERMITS.
3. GENERAL TOLERANCES: ±0.2 ALL ONE PLACE DIMENSIONS, ±0.1 ALL TWO PLACE DIMENSIONS, ±2° ALL ANGULAR PLACE DIMENSIONS
4. ALL RADIUS ±0.5.
5. PIN PLATING DETAILS . . .
6. (SEALED INTERFACES ONLY) SEALING SURFACE MUST BE SMOOTH AND FREE OF PARTING LINES.
7. PARTS ARE TO BE FREE OF SCRATCHES, DISCOLORATION, SALT RESIDUE OR OTHER IMPERFECTIONS THAT MAY AFFECT FUNCTION OR FIT OF PART.
8. DRAFT ANGLE PERMISSIBLE ONLY WITHIN PRINT TOLERANCE.

9. SEALING SURFACE, NO WITNESS LINES OR DAMAGE PERMITTED.
10. VENT HOLE SIZE AND LOCATION OPTIONAL.
11. THIS AREA TO REMAIN CLEAR FOR HARNESS ASSEMBLY.
12. HOUSING MATERIAL SELECTION BASED ON PERFORMANCE REQUIRED FOR END APPLICATION AND SOLDERING PROCESS. POLYESTER (PBT) - 30% GLASS TESTED TO USCAR2, REV 3, CLASS 2, MAX. AMBIENT 100 DEGREE C.
13. CIRCUIT NUMBERS 1.0 HIGH CHARACTERS RAISED 0.05 - 0.1 IN A 0.10 TO 0.15 RECESSED AREA.

THIS DRAWING IS A CONTROLLED DOCUMENT.

DIMENSIONS: mm

TOLERANCES UNLESS OTHERWISE SPECIFIED:
0 PLC ±-
1 PLC ±0.5
2 PLC ±0.20
3 PLC ±-
4 PLC ±-
ANGLES ±-

MATERIAL - -
FINISH - -

DWN DL DRUMMOND 11FEB2005
CHK AJ VALASEK 11FEB2005
APVD AJ VALASEK 11FEB2005
PRODUCT SPEC -
APPLICATION SPEC 114-13060
WEIGHT -
CUSTOMER DRAWING

TE Connectivity

NAME ASSEMBLY, FEMALE, 60 WAY GET, TCM, CONNECTOR

SIZE A1 | CAGE CODE 00779 | DRAWING NO C-1438521 | RESTRICTED TO -

SCALE 1:1 | SHEET 2 OF 3 | REV E9

4805 (3/13)

THIS DRAWING IS UNPUBLISHED. RELEASED FOR PUBLICATION 20
© COPYRIGHT 20 BY - ALL RIGHTS RESERVED.

REVISIONS

P	LTR	DESCRIPTION	DATE	DWN	APVD
	-	SEE SHEET 1	-	-	-

	1	2	3	4	5	6	7	8	9	10	11	12	13	14	15	16	17	18	19	20	21	22	23	24	25	26	27	28	29	30
C143					X			X		X		X	X	X	X			X	X		X	X	X	X	X	X	X	X	X	X
		X						X		X				X	X										X	X	X			X
C142		X			X					X			X					X					X	X			X		X	
					X								X	X					X	X						X			X	X
C141					X			X		X		X	X	X	X	X	X	X	X		X	X		X	X	X	X	X	X	X
		X		X	X	X	X	X		X	X			X								X	X		X	X	X			X
C140					X			X		X		X	X	X	X			X	X		X	X	X	X	X	X		X	X	
		X						X		X				X	X										X	X	X			X
C139					X			X		X		X	X	X	X		X	X	X		X	X	X	X	X	X		X	X	
		X		X	X	X	X	X		X				X								X			X	X	X			X
C138					X			X		X		X	X	X	X		X	X	X		X	X		X	X	X	X	X	X	X
		X		X	X	X	X	X		X				X								X			X	X	X			X
C137					X			X		X		X	X		X		X	X	X		X	X	X	X	X	X	X	X	X	X
		X		X	X	X	X	X		X				X								X			X	X	X	X	X	X
C136					X			X		X		X	X	X	X		X	X	X		X	X	X	X	X	X	X	X	X	X
		X		X	X	X	X	X		X				X								X			X	X	X	X	X	X
C132					X				X		X	X	X	X	X		X	X	X			X	X	X	X	X	X		X	X
				X	X	X	X			X												X			X	X	X			X
C131					X			X		X		X	X	X	X		X	X	X		X	X		X	X	X	X	X	X	X
		X		X	X	X	X	X		X				X								X			X	X	X	X	X	X
C129										X				X	X	X	X	X		X	X	X					X			X
		X				X	X			X			X	X	X				X	X						X			X	X
C128		X		X	X									X	X	X	X			X	X	X				X				X
		X			X	X	X			X		X	X	X	X				X		X					X				X
C127				X										X	X	X	X	X		X	X	X	X	X			X			X
						X	X						X	X	X				X	X	X					X			X	X
C122				X										X	X	X	X	X		X	X	X	X	X			X			X
						X	X			X			X	X	X				X	X						X			X	X

31 32 33 34 35 36 37 38 39 40 41 42 43 44 45 46 47 48 49 50 51 52 53 54 55 56 57 58 59 60

	1	2	3	4	5	6	7	8	9	10	11	12	13	14	15	16	17	18	19	20	21	22	23	24	25	26	27	28	29	30
C115		X			X					X			X			X	X	X							X			X		X	
		X			X									X	X					X	X						X			X	X
C109				X						X				X	X	X	X	X		X	X	X						X			X
		X				X	X			X			X	X					X	X						X			X	X
C108		X		X	X									X	X	X	X			X	X	X				X				X
		X			X	X	X			X		X	X	X	X				X							X				X
C107				X						X				X	X	X	X	X		X	X	X								X
		X				X	X			X			X	X	X				X							X			X	X
C75		X			X					X			X	X	X	X	X	X		X			X	X			X		X	X
		X			X									X	X				X	X						X			X	X
C74		X			X					X			X	X	X	X	X	X		X			X				X		X	X
		X			X									X	X	X			X	X						X			X	X
C73		X			X					X			X	X	X	X	X	X		X			X				X		X	X
		X			X									X	X				X	X						X			X	X
C64																X	X	X	X	X	X									
					X		X		X									X	X	X	X	X	X	X	X	X	X			
C63			X																	X	X	X	X							
			X	X	X															X	X	X	X	X	X	X	X			
C62		X		X	X					X			X	X	X	X	X	X		X		X				X	X		X	X
		X			X	X	X			X		X	X	X	X				X	X		X				X			X	X
C61		X		X	X					X			X	X	X	X	X	X		X	X	X				X	X		X	X
		X			X	X	X			X		X	X	X	X				X	X		X				X			X	X
C49										X	X	X	X	X	X	X	X	X		X			X	X	X		X	X	
		X		X	X	X	X	X	X			X	X	X										X	X	X	X	X	
C3																														
C1																			X	X	X	X	X	X	X	X	X	X	X	X
		X		X	X					X	X	X	X	X	X				X	X			X	X			X	X		

31 32 33 34 35 36 37 38 39 40 41 42 43 44 45 46 47 48 49 50 51 52 53 54 55 56 57 58 59 60

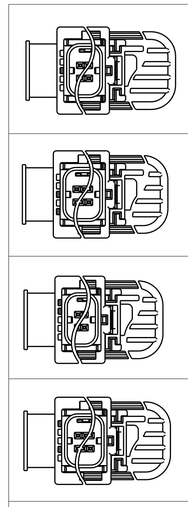

KEYING ARRANGEMENT
(■ INDICATES PRESENCE OF KEYWAY OR ABSENCE OF KEY)

CIRCUIT ARRANGEMENT

X INDICATES UNAVAILABLE (BLOCKED) CIRCUIT

THIS DRAWING IS A CONTROLLED DOCUMENT.

DIMENSIONS: mm

TOLERANCES UNLESS OTHERWISE SPECIFIED:
0 PLC ±-
1 PLC ±0.5
2 PLC ±0.20
3 PLC ±-
4 PLC ±-
ANGLES ±-

MATERIAL - -
FINISH - -

DWN 11FEB2005 DL DRUMMOND
CHK 11FEB2005 AJ VALASEK
APVD 11FEB2005 AJ VALASEK
PRODUCT SPEC -
APPLICATION SPEC 114-13060
WEIGHT -

TE Connectivity

NAME ASSEMBLY, FEMALE, 60 WAY GET, TCM, CONNECTOR

SIZE A1 | CAGE CODE 00779 | DRAWING NO C-1438521 | RESTRICTED TO -

CUSTOMER DRAWING | SCALE 1:1 | SHEET 3 OF 3 | REV E9

4805 (3/13)