THIS DRAWING IS UNPUBLISHED. RELEASED FOR PUBLICATION 2011
© COPYRIGHT 2011 Tyco Electronics AMP GmbH ALL RIGHTS RESERVED.

REVISIONS

P	LTR	DESCRIPTION	DATE	DWN	APVD
	A8	ECR-15-012070	13AUG2015	JJH	BK
	A9	ECR-16-014733	18OCT2016	GH	MP
	A10	ECR-19-016548	24OCT2019	JJH	MP
	A11	ECR-20-003355	20SEP2020	JPN	MP

1 VERSION WITH REDUCED MATING FORCE
Ausfuehrung mit reduzierter Steckkraft

2 SUITABLE FOR TABS 8x1.2mm AND 9.5x1.2mm
Geeignet fuer Flachstecker 8x1.2mm und 9.5x1.2mm

3 FOR CRITIZATION OF THE GAP-SIZE,
THE MATING-FORCE HAS PRIORITY
(<40N WITH TEST TAB ACC. TO PRODUCT SPEC).
Zur Beurteilung des Oeffnungsmasses
ist die Steckkraft ausschlagebend
(<40N mit der Pruefung tab nach produktspezifikation).

4 1-3 µm TIN LAYER FOR HIGHER TEMPERATURE REQUIREMENTS.
1-3 µm Zinnschicht fuer hoehere Temperaturanforderungen.

5 CONTACT ZONE SELECTIVE PRE-SILVER PLATED MIN. 3 µm; REST Ag FLASH
Kontaktzone selektiv voresilbert min. 3 µm; Rest Ag Blitz

CHOICE OF SINGLE WIRE SEALS ACCORDING INSULATION-DIAMETER
Auswahl Einzeladerdichtung nach Isolationsdurchmesser

INSULATION-DIAMETER [mm] Isolationsdurchmesser Leitung [mm]		SINGLE WIRE SEAL Einzeladerdichtung
FLK	3.3 - 3.7	357972744 (VW-No.)
	4.0 - 4.5	357972744 (VW-No.)
	4.6 - 5.2	1355437-1
	5.8 - 6.6	1355437-2
FLR	2.7 - 3.0	-
	3.4 - 3.7	357972744 (VW-No.)
	4.0 - 4.3	357972744 (VW-No.)
	5.4 - 5.8	-

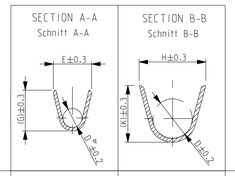

VERSION A

(UNSEALED / ungedichtet)

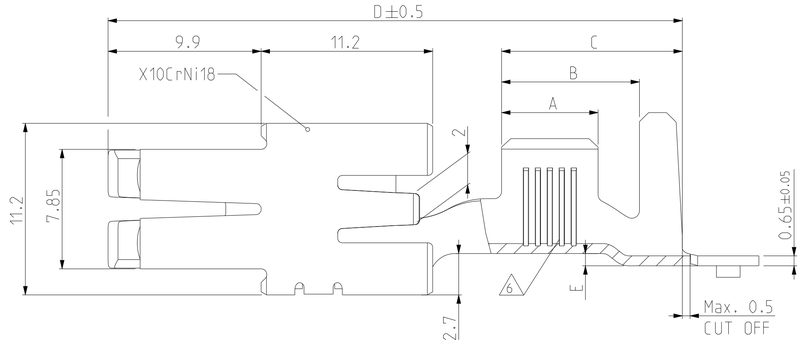

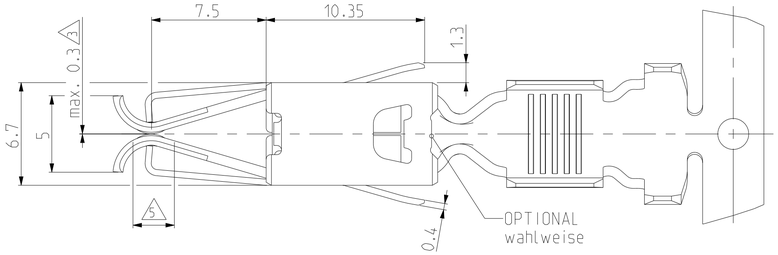

VERSION B

(SINGLE WIRE SEAL-SYSTEM / Einzel-Dichtungs-System)
(SWS)

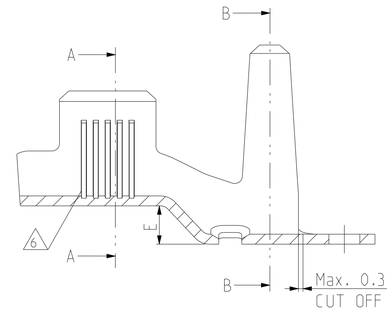

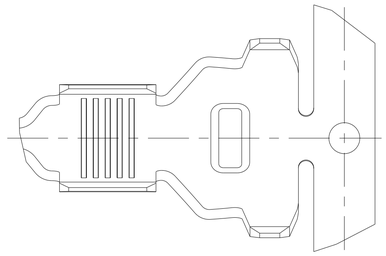

	PN STRIP FORM Bandware	REV.	MATERIAL Werkstoff	SURFACE Oberfloeche	NUMBER OF SERRATIONS Anzahl der Verzahnungen 6	DGB WIRE RANGE [mm²]	INSULATION DIAMETER [mm]	STRIP FORM WIRE CRIMP Drahtcrimp	STRIP FORM INSUL.-CRIMP Isol.-Crimp	APPLICATION TOOL Anschlag-WKZ	HAND TOOL Handzange	A	B	C	D	E +0.25 -0.15
VERSION B	-	-	-	-	-	- -	- -	- - -	- - -	- - -	-	-	-	-	-	-
	962938-1	F	CuNiSi	vorverzinnt PRETINNED	5	6.0-10.0	4.6-6.6 FLK 4.0-5.8 FLR	E=7.0 G=7.5 D_{DR}=3.7	H=13.0 K=13.0 D=9.5	2151794 680699 2-878660-2	-	6.3	11.9	15.6	41	2.5
	962936-1	F	CuNiSi	vorverzinnt PRETINNED	4	4.0-6.0	4.0-5.2 FLK 3.4-4.3 FLR	E=5.6 G=5.9 D_{DR}=3.0	H=13.0 K=13.0 D=9.5	2151146 2-878595-2	-	5.5	11.1	14.8	41	2.5
	962934-1	D	CuNiSi	vorverzinnt PRETINNED	4	>2.5-4.0	3.3-4.5 FLK 2.7-3.7 FLR	E=4.9 G=5.1 D_{DR}=2.3	H=13.0 K=13.0 D=9.5	2151781 1855578 2-878594-2	-	4.5	11.1	14.8	41	2.5
VERSION A	-	-	-	-	-	- -	- -	- - -	- - -	- -	-	-	-	-	-	-
A11	1-962932-6	A	CuNiSi	4	5	6.0-10.0	4.6-6.6 FLK 4.0-5.8 FLR	E=7.0 G=7.5 D_{DR}=3.7	H=9.2 K=10.0 D=5.9	2151285 2-878659-2	734533-1 (only for 10mm²)	6.3	9.0	11.8	37.5	0.8
	962932-1	H	CuNiSi	vorverzinnt PRETINNED												
A11	1-962930-6	A	CuNiSi	4	4	4.0-6.0	4.0-5.2 FLK 3.4-4.3 FLR	E=5.6 G=5.9 D_{DR}=3.0	H=7.8 K=8.1 D=4.5	2151284 1855532	734532-1 (only for 6mm²)	5.5	7.8	10.1	37.5	0.6
	962930-1	H	CuNiSi	vorverzinnt PRETINNED												
	962928-3	G	CuNiSi	5	4	>2.5-4.0	3.3-4.5 FLK 2.7-3.7 FLR	E=4.9 G=5.1 D_{DR}=2.3	H=6.9 K=7.2 D=4.0	2151492 2-878592-2	734531-1	4.5	6.8	9.1	37.5	0.6
	962928-1	G	CuNiSi	vorverzinnt PRETINNED												
								CRIMP DIMENSION (mm) Crimpabmessungen (mm)		EXTRACTION TOOL Ausdrueckwerkzeug No.: 1-1579007-7						

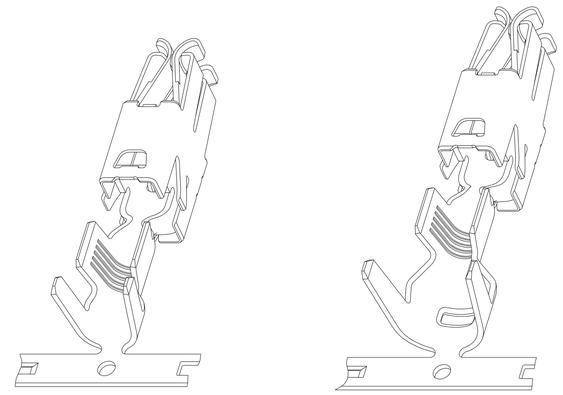

THIS DRAWING IS A CONTROLLED DOCUMENT. DIMENSIONS AND TOLERANCING PER GPS (ISO STANDARDS).

DIMENSIONS: mm

TOLERANCES UNLESS OTHERWISE SPECIFIED: 0 PLC ±0.2mm; 1 PLC ±0.1; 2 PLC ±0.05; 3 PLC ±0.025; 4 PLC ±0.0125; ANGLES ±2°; ISO 8015; ISO 2768-H -E

MATERIAL: SEE TABLE -
FINISH: SEE TABLE -

DWN M. Pfeilschifter 31JUL2000
CHK V. Hynn 31JUL2000
APVD M. Bleicher 31JUL2000
PRODUCT SPEC 108-18047
APPLICATION SPEC 114-18075
WEIGHT -

TE Connectivity

NAME: MAXI POWER TIMER FOR 1.2mm TABS
MAXI POWER TIMER fuer 1.2mm TABs
-

SIZE A1 | CAGE CODE 00779 | DRAWING NO C-1355050 | RESTRICTED TO -

Customer Drawing | SCALE 5:1 | SHEET 1 OF 1 | REV A11

4805 (3/13)