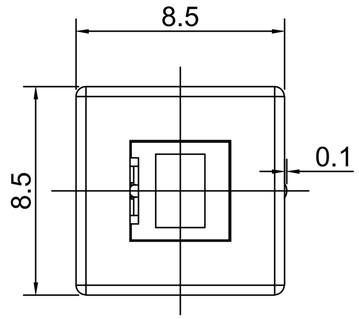

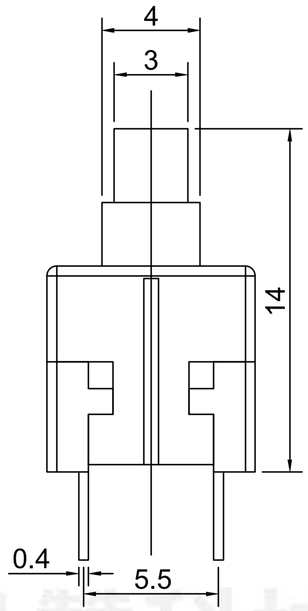

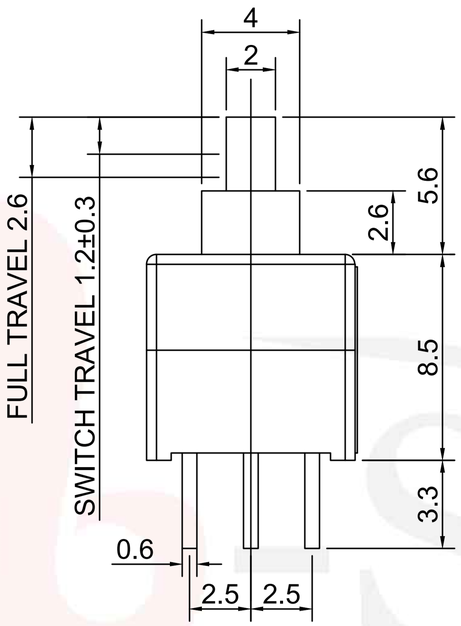

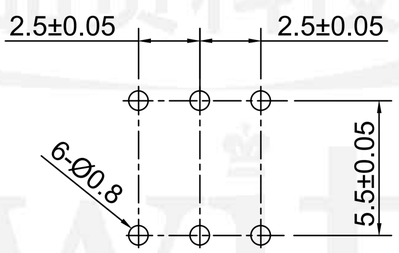

P.C.B LAYOUT

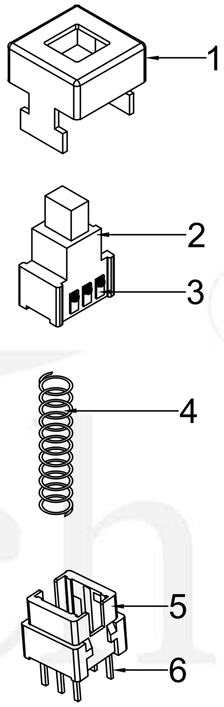

PS-8556DVX-6PN

PUSH SWITCH

Switch Type
85=8.5×8.5mm

Foot Type
D=Dip

Switch Height
56=5.6mm

Switch Function
L=Lock
N=No Lock

Foot Position
6P=6pin

Type
V=Vertical

Operating Force
A=180gf
B=250gf

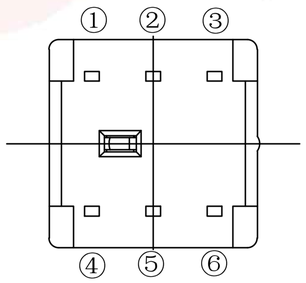

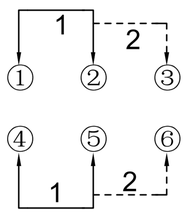

SCHEMATIC

PUSH-ON:
2-3,5-6 Conduction
PUSH-OFF
1-2,4-5 Conduction

G-Switch Specification:
Operating temperature range：-40℃to+85℃
Rating：0.5A.24V DC
Insulation resistance:：100MΩ min.100V DC
Dielectric strength： 250V AC for 1 min
Contact resistance:：100m Ω max.
Switch lifetime：30,000Cycles

NO.	PART NAME	MATERIAL	QTY	FINISHING
8				
7	TERMINAL	BRASS	6	Ag PLATED
6	CASE	PPA	1	BLACK
5	LOCK PIN	SUS WIRE	1	NATURAL
4	SPRING	SUS WIRE	1	NATURAL
3	CONTACT	BRONZE	2	Ag PLATED
2	KNOB	PPA	1	WHITE
1	COVER	PPA	1	BLACK

Pb Process Capable

RoHS Compliant 2002/95/EC

HALOGEN Compliant Halogen Free

品赞科技 G-Switch ®

G-Switch Electronic (HongKong) CO.,Ltd.

Unless otherwise specified, Tolerance:

X.	±0.30
X.x	±0.20
X.xx	±0.15
X.xxx	±0.10
Angles	±3°

DESIGN Feng²	DATE 2022.08.12	Molde code: PS-8556DVX-6PN	
CHECKED	DATE		
APPROVED	DATE		
http://www.dg-switch.com		REV.: X1	SCALE: 4:1	UNIT: mm
TEL:0769-82388879		SIZE: A4	SHEET: 1/1	