ROHS Compliant

MAPX	MODIFICATION	DATE	DRAW	APPROVE

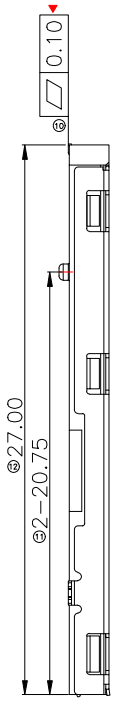

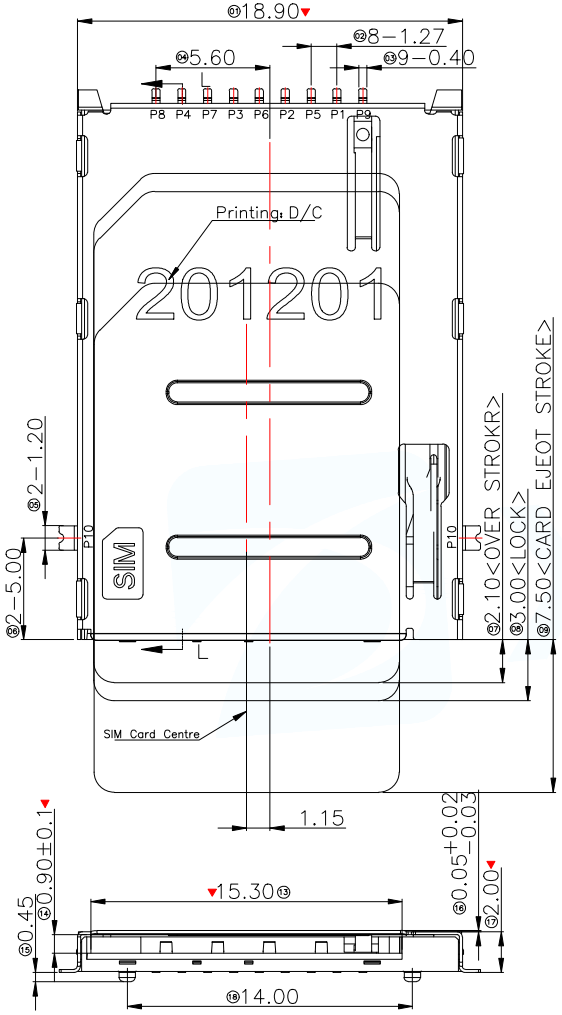

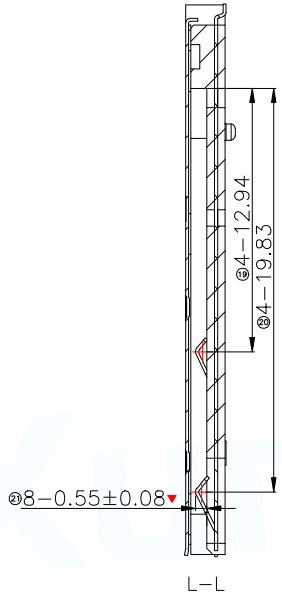

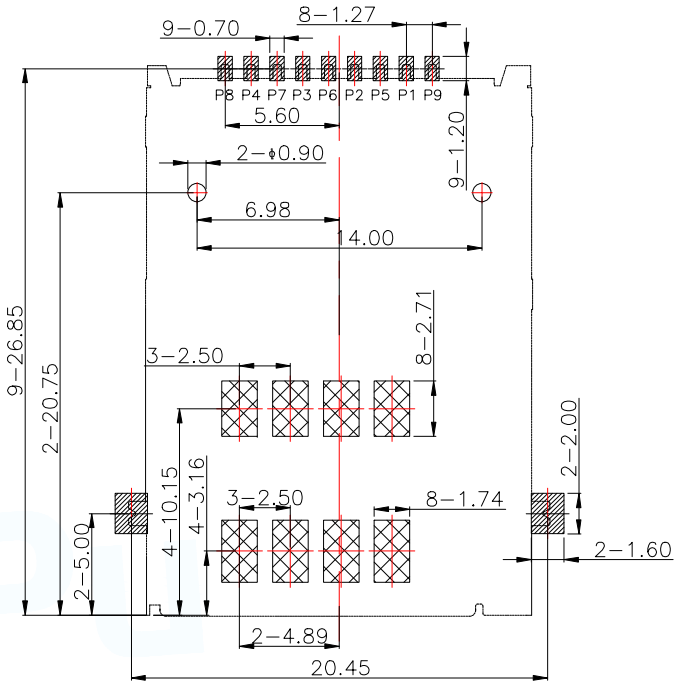

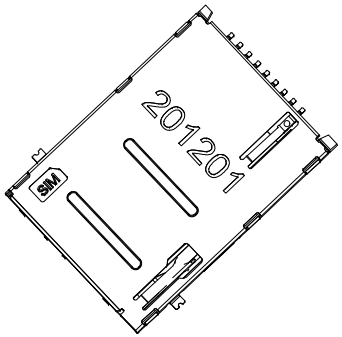

RECOMMENDED PCB LAYOUT

TOLERANCE:±0.05

SMT SOLDER AREA

COPPER RESTRICTED AREA
1.TOUCH AREA OF CONTACT TIPS NO ELECTRICAL FUNCTION
2.NO FIRST PCB_LAYOUT CIRCUITS IN THE AREA

Printing instructio:

YY MM DD
- DAY
- MONTH
- YEAR

NOTES:

1.MATERIAL:
- HOUSING: High Temperature Thermoplastic
- Terminal:Copper Alloy
- Shell: Stainless Steel

2.PLATING:
- Terminal:40u" Ni UNDERPLATED OVERALL G/F PLATED ON CONTACT AREA AND SOLDER AREA
- Sheel:30u" Ni UNDERPLATED OVERALL G/F PLATED ON CONTACT AREA AND SOLDER AREA

3.TECHNICAL SPECIALITY:
- RATED VOLTAGE: 30V AC MAX.
- CURRENT RATING: 0.5A MAX.
- INSULATION RESISTANCE:1000MΩ MIN
- CONTACT REISTANCE:50mΩ MAX
- WITHSTANDING VOLTAGE: 500V AC FOR 1 MINUTES
- OPERATING TEMPERATURE: -40℃~+85℃ Humidity 80% R.H MAX

CRICUIT DIAGRAM FOR CARD DETECT SWITCH

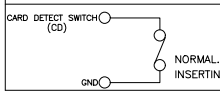

PIIN/NO	ASSIGNMENT
P1	VCC
P2	RST
P3	CLK
P4	Reserved
P5	GND
P6	VPP
P7	I/O
P8	Reserved
P9	Detect Switch
P10	GND

MANUFACTURE DWG	东莞市讯普电子科技有限公司 DongGuan XunPu Electronics Co,Ltd			
UNLESS OTHERWISE SPECIFED TOLERANCES	TITLE: 2.0H 8+1PIN P-P SIM卡座			
	PAR	SMC-134-ACP9		
	DWN			
DECIMALS: / ANGLES:	CHKD			
.X:±0.30 / X.°:±2°	APVD			
.XX:±0.20 / X.X°:±1°	SCALE1:1	UNIT:MM		
.XXX:±0.10	Website address	SIZE:A4	SHEET:1F1	REV:A