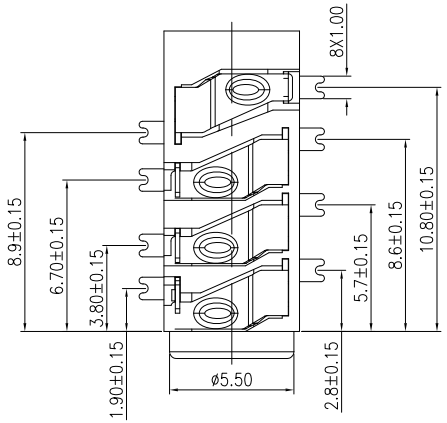

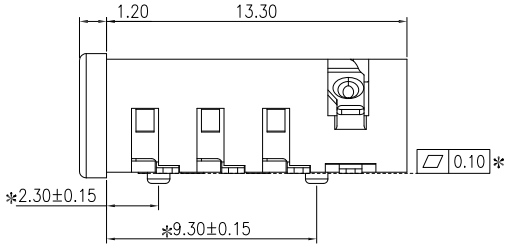

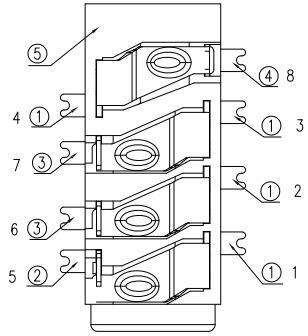

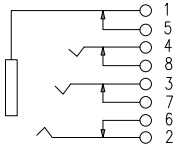

CIRCUIT DIAGRAM

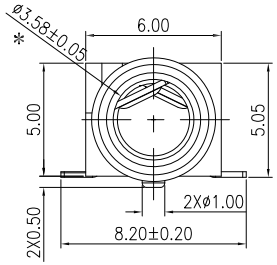

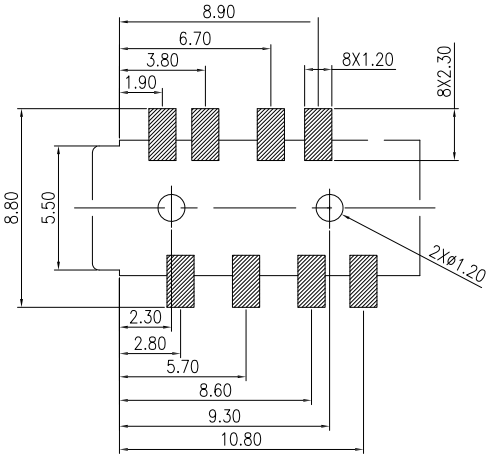

PCB -YOUT TOP VIEW

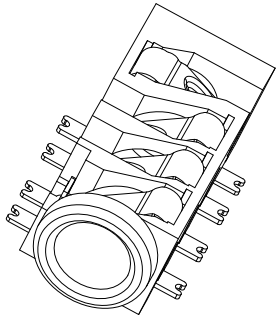

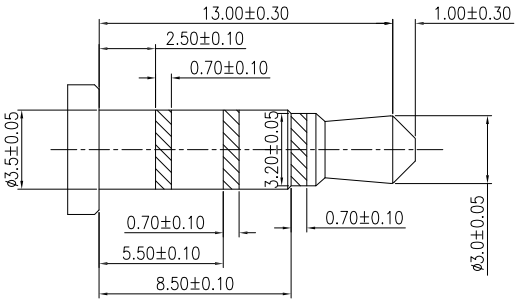

SPECIFICATIONS:

1. ELECTRICAL CHARACTERISTICS:

1-1. RATING: 20V, 1A Min.

1-2. CONTACT RESISTANCE:
50 MILLIOHMS Max. FOR INITIAL,
80 MILLIOHMS Max. AFTER 5000 CYCLES.

1-3. INSULATION RESISTANCE: 100 MEGAOHMS Min. BY 500V DC AFTER 1 MINUTE.

1-4. DIELECTRIC WITHSTANDING VOLTAGE: 500V RMS AFTER 1 MINUTE.

2. MECHANICAL CHARACTERISTICS:

2-1. INSERTION FORCE : 0.3~3.0 KGF(2.94~29.4N)

2-2. WITHDRAWAL FORCE : 0.3~3.0 KGF(2.94~29.4N)

3. LIFE TEST: 5,000 CYCLES MIN.

NO.	DESCRIPTION	QTY	MATERIAL	PLATING & COLOR
⑥	HOUSING	1	PA-9T	Black
⑤	TERMINAL	1	PHOSPHOR BRONZE t=0.20	Ag-Plated
④	TERMINAL	2	PHOSPHOR BRONZE t=0.20	Ag-Plated
③	TERMINAL	1	PHOSPHOR BRONZE t=0.20	Ag-Plated
①	TERMINAL	4	PHOSPHOR BRONZE t=0.25	Ag-Plated

Pb Process Capable

RoHS Compliant 2002/95/EC

HALOGEN FREE Compliant Halogen Free

品赞科技 L-Switch

G-Switch Electronic (HongKong) CO.,Ltd.

Unless otherwise specified, Tolerance:

X.	±0.30
X.x	±0.20
X.xx	±0.15
X.xxx	±0.10
Angles	±3°

DESIGN 陈锋枫	DATE 2016.05.29	TITLE: 8PIN IPHONE JACK SMT	
CHECKED	DATE		
Site:www.dg-swtitch.com	DATE		
P/N:.PJ-393		REV.: X1	SCALE: 4:1	UNIT: mm
TEL:0769-82388879		SIZE: A4	SHEET: 1/1	