PRODUCT NO.	RoHS compliant
DSIC04THGET	

REV.	ECN NO.	DR	DATE

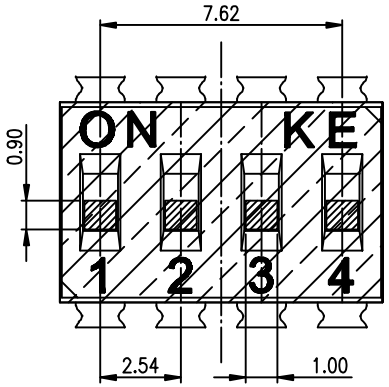

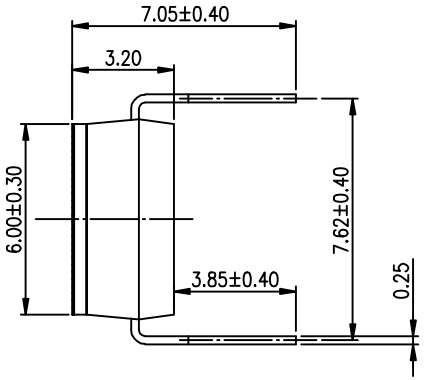

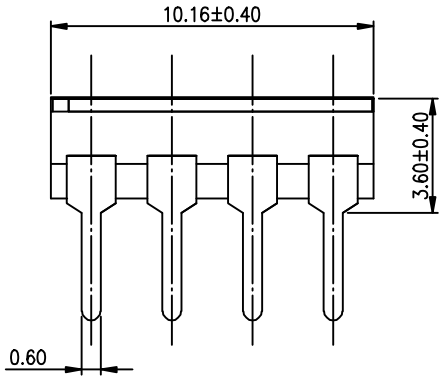

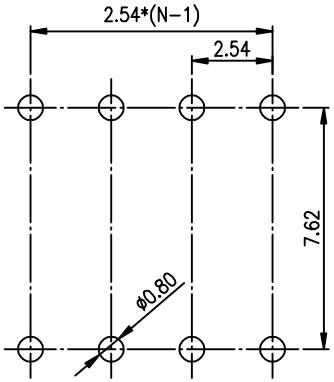

RECOMMENDED P.C.B. LAYOUT (TOP VIEW)

NOTES :

1.Specification:

1>.Operating force:1000gf Max

2>.Operating Temperature:-40° to+85°

3>.Storage Temperature::-40° to+85°

4>.Mechanical Life:3000cycles minimum

5>.Electrical Life:2000cycles 25mA 24VDC

2. PLATING:

GOLD FLASH 1u"~2u"SOLDERTAIL,
1u"~3u" GOLD PLATING ON THE CONTACT AREA,
WITH 50u" NICKEL UNDERPLATINGOVERALL.

3. PART NUMBER DESCRIPTION

DSIC XX T H G E T

- [包装方式：T=管装 R=Reel]
- [电镀层:E=接触部1u"~3u" /焊接部1u"~2u"]
- [G=镀全金 S=内金外镀]
- [脚型：S脚 / J脚 / H脚 / A脚 / Z脚]
- [T=低推贴胶 S=低推不贴胶 L=长推]
- [产品P数:01=1P 03=3P ..... 12=12P]

[Schematic]

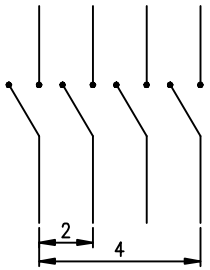

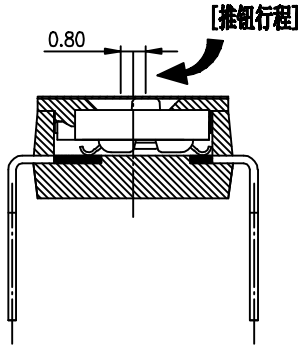

(Construction)

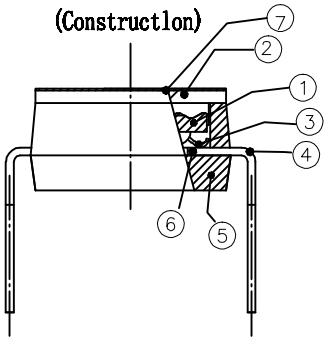

Number	Part Name	Material	Finished
①	Actuator	UL94 V0	White
②	Cover	UL94 V0	Black
③	Movable	Copper Alloy	1u"~3u"Gold
④	Terminal	Brass	1u"~2u"Gold
⑤	Base	UL94 V0	Black
⑥	Terminal Contact	Brass	1u"~3u"Gold
⑦	Marly	UL94 V0	0.05mm

TOLERANCE UNLESS OTHERWISE SPECIFIED	
LINER	ANGLES
.0 ± 0.25	0. ± 2°
.00 ± 0.15	.0 ± 1°
.000± 0.10	.00± 0.5°
DESIGN	kathy
DRAWING	
CHECK	
APPRO.	

INSPECTION COPY

PROJECTION

2012/04/12

东莞市广督实业有限公司
DongGuan Kingtek Industrial Co., Ltd.

TITLE
BY DSIC SERIES PITCH 2.54mm

PRODUCT FAMILY DSIC SERIES

PRAT NO. DSIC04THGET

FILE NO. DSIC04THGET-A

SIZE	UNIT	SCALE	SHEET	REV.
A4	mm	2 : 1	1OF1	A