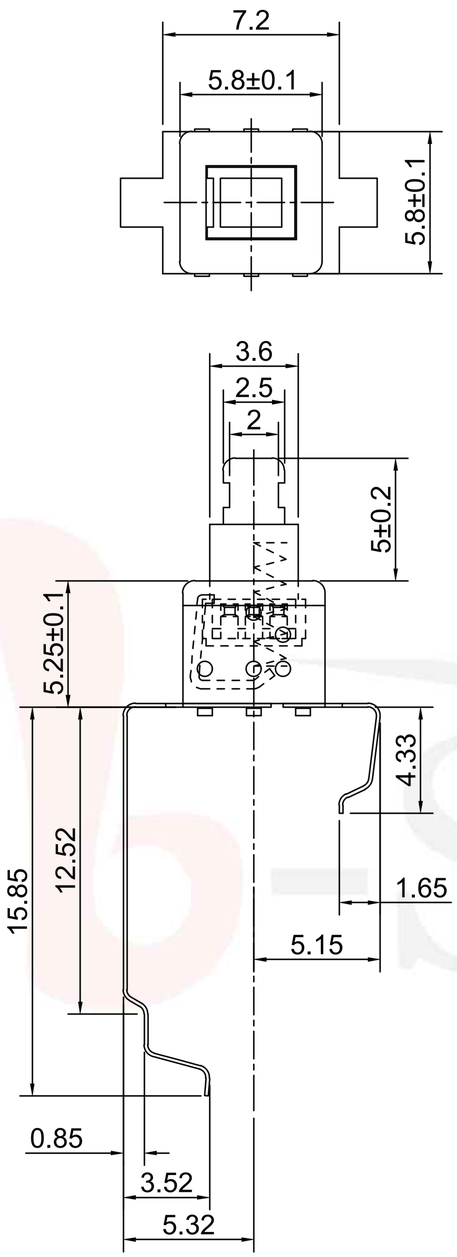


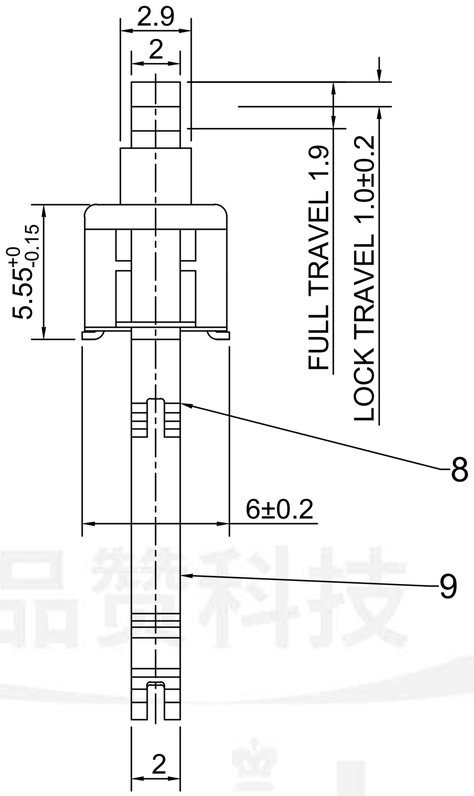


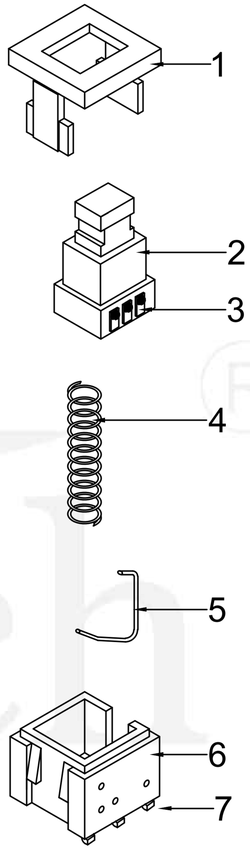

PS-5850DDX-2PL

**PUSH SWITCH**

**Switch Type**
58=5.8×5.8mm

**Foot Type**
D=Dip

**Switch Height**
50=5.0mm

**Type**
D=Different

**Operating Force**
A=180gf
B=250gf

**Foot Position**
2P=2pin

**Switch Function**
L=Lock
N=No Lock

PUSH

SCHEMATIC

**G-Switch Specification:**
Operating temperature range：-40℃to+85℃
Rating：0.5A.24V DC
Insulation resistance:：100MΩ min.100V DC
Dielectric strength： 250V AC for 1 min
Contact resistance:：100m Ω max.
Switch lifetime：30,000Cycles

| NO. | PART NAME | MATERIAL | QTY | FINISHING |
|---|---|---|---|---|
| 8 | | | | |
| 7 | TERMINAL | BRASS | 6 | Ag PLATED |
| 6 | CASE | PPA | 1 | BLACK |
| 5 | LOCK PIN | SUS WIRE | 1 | NATURAL |
| 4 | SPRING | SUS WIRE | 1 | NATURAL |
| 3 | CONTACT | BRONZE | 2 | Ag PLATED |
| 2 | KNOB | PPA | 1 | WHITE |
| 1 | COVER | PPA | 1 | BLACK |

Pb Process Capable

RoHS Compliant 2002/95/EC

HALOGEN Compliant Halogen Free

品赞科技 G-Switch ®

G-Switch Electronic (HongKong) CO.,Ltd.

Unless otherwise specified, Tolerance:

| | |
|---|---|
| X. | ±0.30 |
| X.x | ±0.20 |
| X.xx | ±0.15 |
| X.xxx | ±0.10 |
| Angles | ±3° |

| | | | |
|---|---|---|---|
| DESIGN Feng² | DATE 2022.08.12 | Molde code: PS-5850DDX-2PL | |
| CHECKED | DATE | | |
| APPROVED | DATE | | |
| http://www.dg-switch.com | | REV.: X1 | SCALE: 4:1 | UNIT: mm |
| TEL:0769-82388879 | | SIZE: A4 | SHEET: 1/1 | |