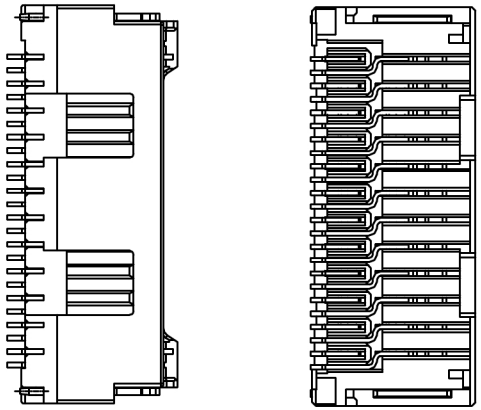

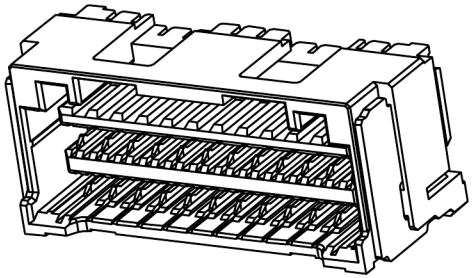

Specifications:
规格：
Voltage rating:100V AC/DC
额定电压：100V AC/DC
Current rating:1.5A AC/DC
额定电流：1.5A AC/DC
Withstanding voltage:500V AC/minute
耐受电压：500V AC/分钟
Temperature range:-40℃-+105℃
温度范围：-40℃-+105℃
Insulation resistance:≥500MΩ
绝缘电阻：≥500MΩ
Contact resistance:≤20mΩ
接触电阻：≤20mΩ

X1515 W R S- 2xXX - LP SW
① ② ③④ ⑤ ⑥ ⑦

1.Series No
2.Category:W-Wafer
3.Welding Board Angle:R-Stright 90°
4.Welding Way:S-SMT
5.Row No.Pin No:2xXX-2x04~2x14P
6.Material:LP-LCP 94V-0 (Natural)
7.Plating:SW- Matte Tin Plated

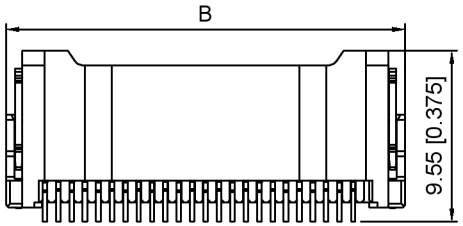

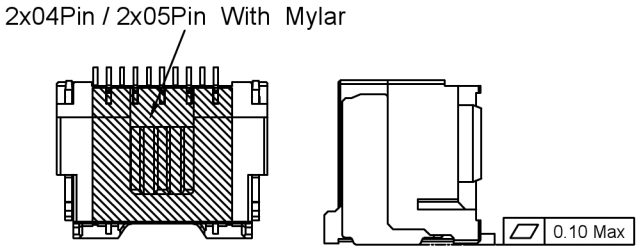

2x04Pin
2x05Pin

Poles	Dimensions(mm)			
	A	B	C	D
2x04	4.50	10.30	7.40	8.95
2x05	6.00	11.80	8.90	10.45
2x06	7.50	13.30	10.40	11.95
2x07	9.00	14.80	11.90	13.45
2x08	10.50	16.30	13.40	14.95
2x09	12.00	17.80	14.90	16.45
2x10	13.50	19.30	16.40	17.95
2x11	15.00	20.80	17.90	19.45
2x12	16.50	22.30	19.40	20.95
2x13	18.00	23.80	20.90	22.45
2x14	19.50	25.30	22.40	23.95

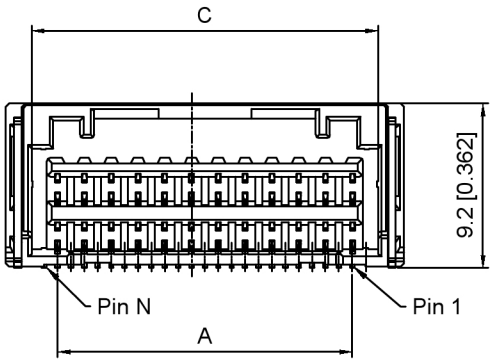

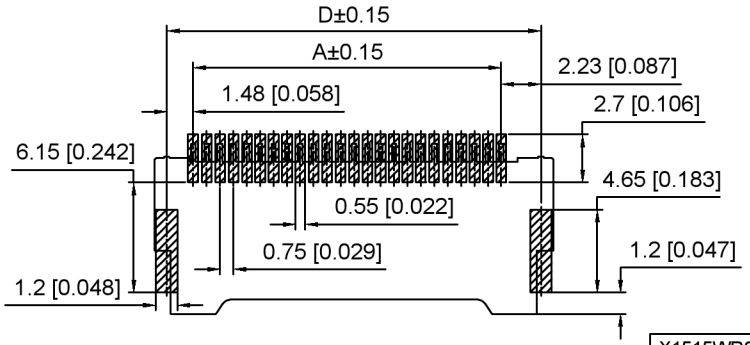

Recommended PCB Layout
Tolerance:±0.05

X1515WRS-2xXX-LPSW	LCP	Phosphor Bronze	X1515H-A
PART N0	Material	Material(Pin)	Suitable XKB Housing

广东星坤科技股份有限公司

MARK	DESCRIPTION	DATE	REVISED	APPROVED
ΔX				
ΔX				
ΔX				

REVISIONS

UNSPECIFIED TOLERANCES	
ANGLAR	±5°
L≤ 4	±0.2
4<L≤ 16	±0.3
16<L≤ 63	±0.4
L> 63	±0.5

文件工程章

www.helloxkb.com www.helloxkb.cn www.xk-dg.cn

XKB INDUSTRIAL PRECISION CO.,LIMITED

DSND		SCALE: N/A	MODEL TYPE: 1.5mm Crimp Style Connector
DWN		VIEW:	PART NO.: X1515WRS-2xXX-LPSW
CHKD		UNIT: mm/in	DWG NO.: X-X1515WRS-2xXX-LPSW
APPD		SIZE: A4	

WEIGHT	SHEET	REVISION
	1/1	A0