HAOYU

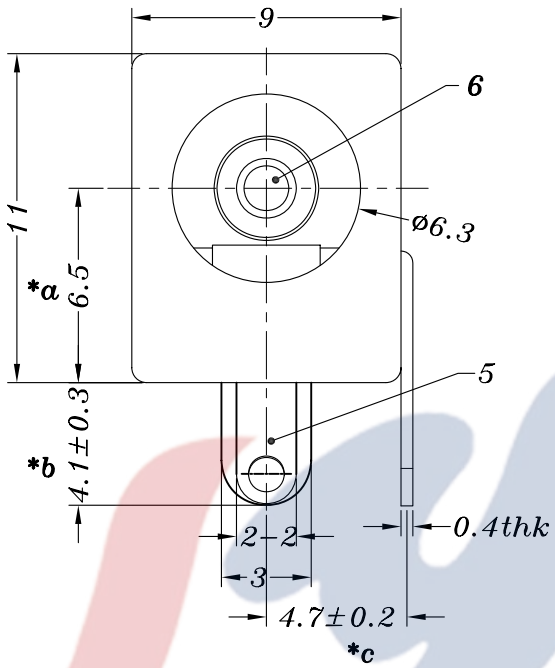

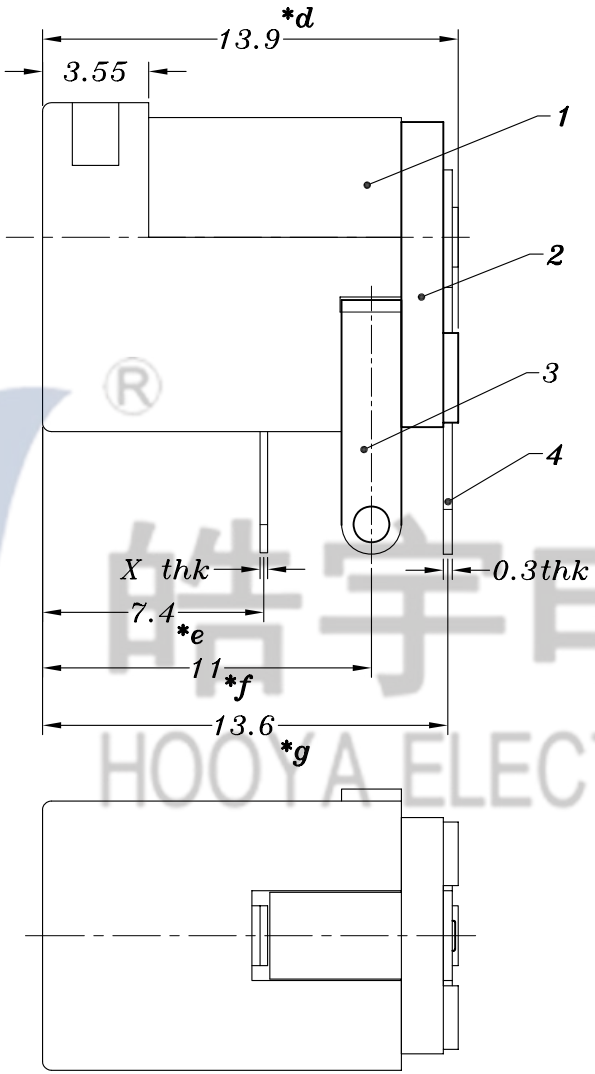

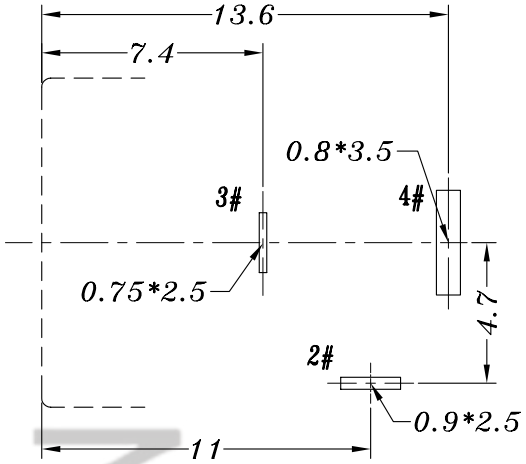

P.C.B LAYOUT

MATAL	X
SUS	0.2mm
PBS	0.25mm

PIN	ø2.0	ø2.5
APPD.		

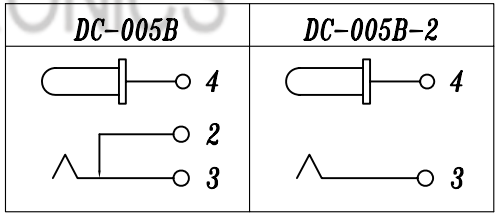

SCHEMATIC

NO.	PART NAME	MATERIAL	QTY	FINISHING
6	DC-005 PING	BRASS	1	Ni PLATED
5	DC-005 3#SPRING	SUS/PBS	1	Ag PLATED
4	DC-005 4#FLAT PIECE	BRASS	1	Ag PLATED
3	DC-005 2#CURVE PIECE	BRASS	1	Ag PLATED
2	COVER	PBT	1	BLACK
1	CASE	PBT	1	BLACK

TOLERANCE UNLESS SPECIFIED
UP TO 5mm: ±0.1
ABOVE 5mm: ±0.2
ANGULAR ±1°

NO	DATE	REVISIONS	BY	APPD
1				

TITLE:DC JACK
MODEL:DC-005B φ2.0-PU
UNIT : MM
SCALE: 4:1
ROHS COMPLIANT
DWN
CHK'D
APPD
PRO.AGL:
REV : A

HAOYU(HONGKONG)LIMITED
皓宇(香港)有限公司

皓宇电子 HOOYA ELECTRONICS