THIS DRAWING IS UNPUBLISHED. | RELEASED FOR PUBLICATION 20
© COPYRIGHT 20 BY - ALL RIGHTS RESERVED.

LOC	DIST
ES	00

REVISIONS

P	LTR	DESCRIPTION	DATE	DWN	APVD
	D2	ECR-17-013967	20SEP2017	N.S	I.Y
	D3	ECR-20-011405	12AUG2020	J.L	I.Y
	D4	ECN-21-115526	31AUG2021	J.L	J.Z
	D5	ECN-22-142480 (DRAWING UPDATE ONLY)	08MAR2022	J.L	J.Z

CODING 1

PINOUT CONFIGURATION

CAVITY NO.		1	2	3	4	5	6	7	8	9	10	11	12	13	14	15	16	17	18	19	20	21	22	23	24	25	26	27	28	29	30	31	32	33	34	35	36	37	38	39	40	41	42	43	44	45	46	47	48
2050981-7	2050982-5	X			X			X			X														X													X			X			X			X		
2050981-4	2050982-4	X	X	X	X	X	X	X	X	X	X	X	X	X	X		X	X	X		X	X	X	X	X	X	X	X		X	X	X	X	X	X	X	X	X	X		X	X		X	X	X	X	X	X
~~2050981-3~~	~~2050982-3~~	X		X	X	X	X	X	X	X	X	X	X	X	X		X				X	X	X	X	X	X	X	X		X	X	X	X		X	X	X	X	X		X	X	X	X	X	X		X	X
2050981-2	2050982-2			X	X	X		X	X	X	X	X	X	X	X		X				X	X	X	X	X	X	X	X		X	X	X	X	X	X	X	X	X	X	X	X			X		X		X	X
2050981-1	2050982-1	X	X	X	X	X	X	X	X	X	X	X	X	X	X	X	X	X	X	X	X	X	X	X	X	X	X	X	X	X	X	X	X	X	X	X	X	X	X	X	X	X	X	X	X	X	X	X	X
PACKING PN	TE PN (48P MIXED HOUSING)	1	2	3	4	5	6	7	8	9	10	11	12	13	14	15	16	17	18	19	20	21	22	23	24	25	26	27	28	29	30	31	32	33	34	35	36	37	38	39	40	41	42	43	44	45	46	47	48

BLANKED CAVITIES INDICATE CLOSED LOCATIONS

WITH "X" MARKED CAVITIES INDICATE OPEN LOCATIONS

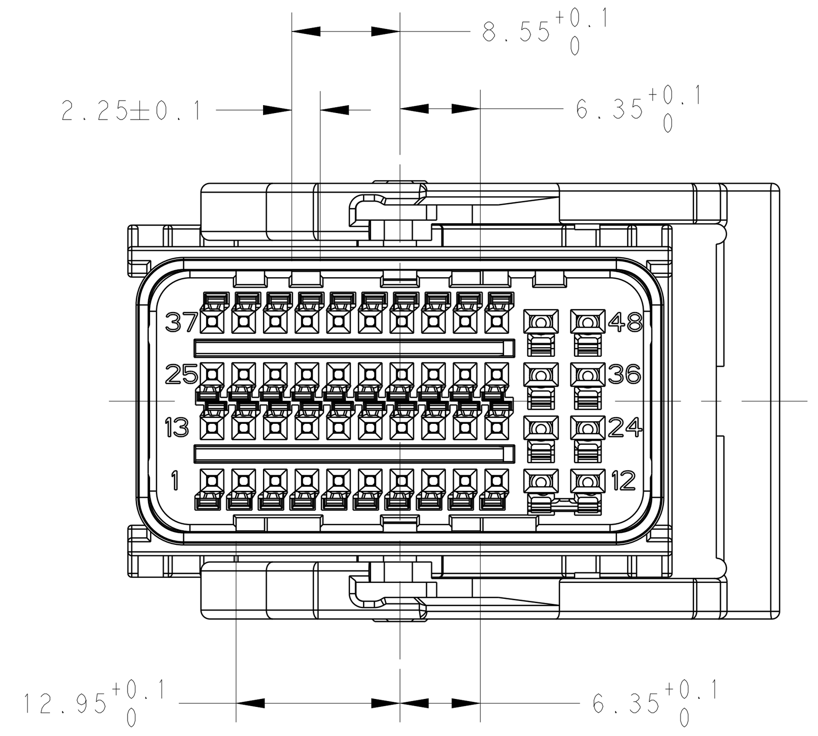

CODING 1
BLACK
LEVER RIGHT
CABLE EXIT LEFT
PN 2050982

CODING 1

PINOUT CONFIGURATION

CAVITY NO.		1	2	3	4	5	6	7	8	9	10	11	12	13	14	15	16	17	18	19	20	21	22	23	24	25	26	27	28	29	30	31	32	33	34	35	36	37	38	39	40	41	42	43	44	45	46	47	48
2137489-3	2137289-3	X			X			X			X														X													X			X			X			X		
2137489-2	2137289-2			X	X	X		X	X	X	X	X	X	X	X		X				X	X	X	X	X	X	X	X		X	X	X	X	X	X	X	X	X	X	X	X			X		X		X	X
2137489-1	2137289-1	X	X	X	X	X	X	X	X	X	X	X	X	X	X	X	X	X	X	X	X	X	X	X	X	X	X	X	X	X	X	X	X	X	X	X	X	X	X	X	X	X	X	X	X	X	X	X	X
PACKING PN	TE PN (48P MIXED HOUSING)	1	2	3	4	5	6	7	8	9	10	11	12	13	14	15	16	17	18	19	20	21	22	23	24	25	26	27	28	29	30	31	32	33	34	35	36	37	38	39	40	41	42	43	44	45	46	47	48

BLANKED CAVITIES INDICATE CLOSED LOCATIONS

WITH "X" MARKED CAVITIES INDICATE OPEN LOCATIONS

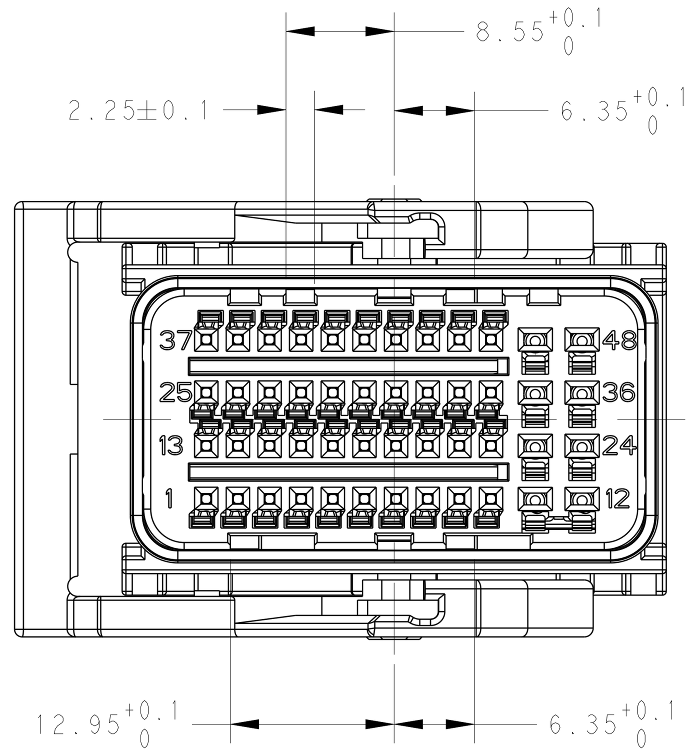

CODING 1
BLACK
LEVER LEFT
CABLE EXIT RIGHT
PN 2137289

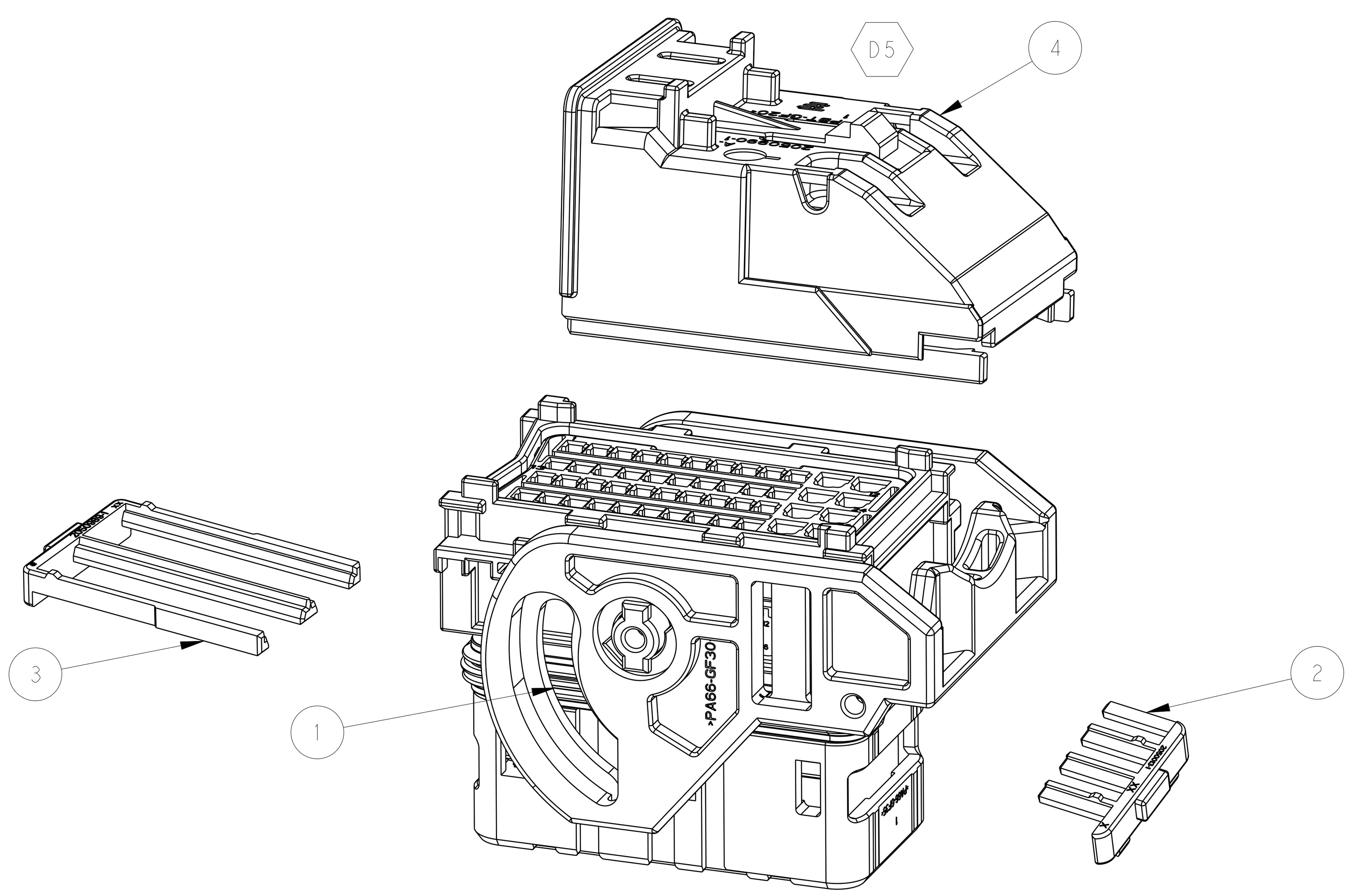

1	1	1	1	1	1	1	1	1	1	1	1	2050990-1	COVER	4
1	1	1	1	1	1	1	1	1	1	1	1	2050989-1	2ND LOCK MQS	3
1	1	1	1	1	1	1	1	1	1	1	1	2050013-2	2ND LOCK 1.5	2
1												X-2137903-X	48P MIXED HOUSING CODE 6,YELLOW	1
	1											X-2137902-X	48P MIXED HOUSING CODE 64,YELLOW	1
		1										X-2137901-X	48P MIXED HOUSING CODE 5,BLUE	1
			1									X-2137900-X	48P MIXED HOUSING CODE 5,BLUE	1
				1								X-2137899-X	48P MIXED HOUSING CODE 4,GREEN	1
					1							X-2137898-X	48P MIXED HOUSING CODE 4,GREEN	1
						1						X-2137293-X	48P MIXED HOUSING CODE 3,BROWN	1
							1					X-2137292-X	48P MIXED HOUSING CODE 3,BROWN	1
								1				X-2137291-X	48P MIXED HOUSING CODE 2,GREY	1
									1			X-2137290-X	48P MIXED HOUSING CODE 2,GREY	1
										1		X-2137289-X	48P MIXED HOUSING CODE 1,BLACK	1
											1	X-2050982-X	48P MIXED HOUSING CODE 1,BLACK	1
X-2137909-X	X-2137908-X	X-2137907-X	X-2137906-X	X-2137905-X	X-2137904-X	X-2137493-X	X-2137492-X	X-2137491-X	X-2137490-X	X-2137489-X	X-2050981-X	PART NO.	DESCRIPTION	ITEM
PACKING PART NO. AND Q'TY														

NOTES:

1. EQUAL QUANTITY OF COMPONENTS TO BE PACKAG TOGETHER IN SAME SHIPPING BOX.
2. APPLICATION TERMINALS SEE TABLE.
3. (triangle) SPECIAL TERMINAL PERFORMANCE SEE RELEVANT SPEC.

APPLICATION TERMINALS

TERMINALS	TE PN	FINISH	WIRE SIZE (mm²)	WIRE SIZE DIAMETER	NOTES
T0.64	968221-1	PRE-TIN	0.5 - 0.75	Ø1.4 - 1.9	BLIND PLUG 1394871-1
	2050986-3 (3)	PRE-TIN	0.5~0.75	Ø1.7 -Ø1.9	
T1.5	638652-2	PRE-TIN	0.5 - 1.00	Ø1.4 - 2.1	BLIND PLUG 1670108-1
	638652-1	PRE-TIN	1.0 - 1.5	Ø1.9 - 2.4	

THIS DRAWING IS A CONTROLLED DOCUMENT.

DWN	B.PU 26AUG2010
CHK	Y.YANG 26AUG2010
APVD	K.ODA 02NOV2010
DIMENSIONS:	mm
TOLERANCES UNLESS OTHERWISE SPECIFIED:	~~0 PLC ±-~~ ~~1 PLC ±0.3~~ ~~2 PLC ±0.3~~ ~~3 PLC ±0.3~~ ~~4 PLC ±0.3~~ ANGLES ±-
MATERIAL	- -
FINISH	- -
PRODUCT SPEC	-
APPLICATION SPEC	114-18761-1
WEIGHT	38.47g
NAME	48POS. MIXED RECEPTACLE HOUSING 40xMQS AND 8x1.5 -
SIZE	A1
CAGE CODE	00779
DRAWING NO	C-2050981
RESTRICTED TO	-
SCALE	1:1
SHEET	1 OF 6
REV	D5

TE Connectivity

CUSTOMER DRAWING

4805 (3/11)

THIS DRAWING IS UNPUBLISHED. RELEASED FOR PUBLICATION 20
© COPYRIGHT 20 BY - ALL RIGHTS RESERVED.

LOC	DIST
ES	00

REVISIONS

P	LTR	DESCRIPTION	DATE	DWN	APVD
	-	SEE SHEET 1	-	-	-

CODING 2

PINOUT CONFIGURATION

CAVITY NO.		1	2	3	4	5	6	7	8	9	10	11	12	13	14	15	16	17	18	19	20	21	22	23	24	25	26	27	28	29	30	31	32	33	34	35	36	37	38	39	40	41	42	43	44	45	46	47	48
2137490-1	2137290-1	X	X	X	X	X	X	X	X	X	X	X	X	X	X	X	X	X	X	X	X	X	X	X	X	X	X	X	X	X	X	X	X	X	X	X	X	X	X	X	X	X	X	X	X	X	X	X	X
PACKING PN	TE PN (48P MIXED HOUSING)	1	2	3	4	5	6	7	8	9	10	11	12	13	14	15	16	17	18	19	20	21	22	23	24	25	26	27	28	29	30	31	32	33	34	35	36	37	38	39	40	41	42	43	44	45	46	47	48
		BLANKED CAVITIES INDICATE CLOSED LOCATIONS																																															
		WITH "X" MARKED CAVITIES INDICATE OPEN LOCATIONS																																															

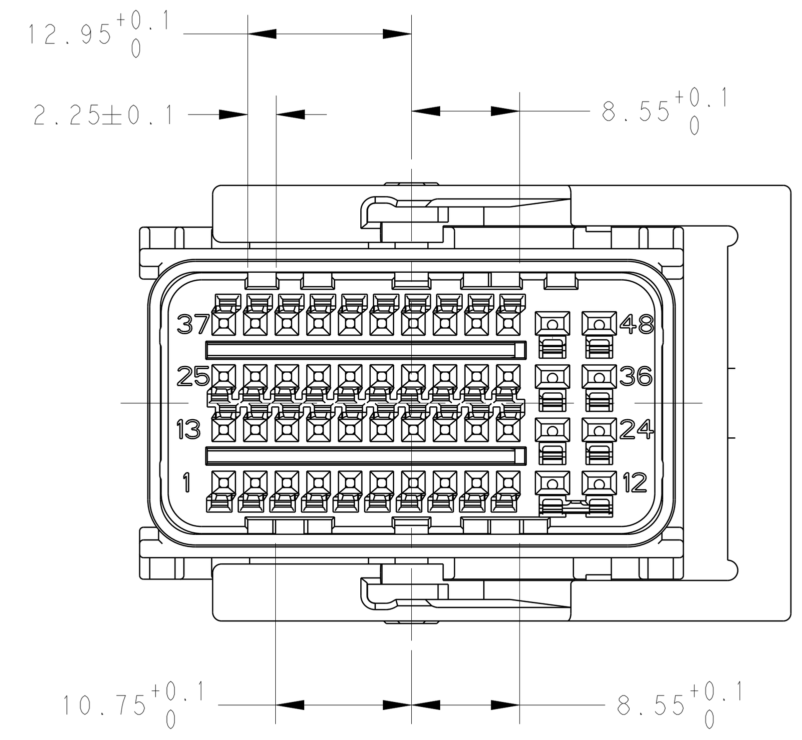

CODING 2
GREY
LEVER RIGHT
CABLE EXIT LEFT
PN 2137290

CODING 2

PINOUT CONFIGURATION

CAVITY NO.		1	2	3	4	5	6	7	8	9	10	11	12	13	14	15	16	17	18	19	20	21	22	23	24	25	26	27	28	29	30	31	32	33	34	35	36	37	38	39	40	41	42	43	44	45	46	47	48
2137491-1	2137291-1	X	X	X	X	X	X	X	X	X	X	X	X	X	X	X	X	X	X	X	X	X	X	X	X	X	X	X	X	X	X	X	X	X	X	X	X	X	X	X	X	X	X	X	X	X	X	X	X
PACKING PN	TE PN (48P MIXED HOUSING)	1	2	3	4	5	6	7	8	9	10	11	12	13	14	15	16	17	18	19	20	21	22	23	24	25	26	27	28	29	30	31	32	33	34	35	36	37	38	39	40	41	42	43	44	45	46	47	48
		BLANKED CAVITIES INDICATE CLOSED LOCATIONS																																															
		WITH "X" MARKED CAVITIES INDICATE OPEN LOCATIONS																																															

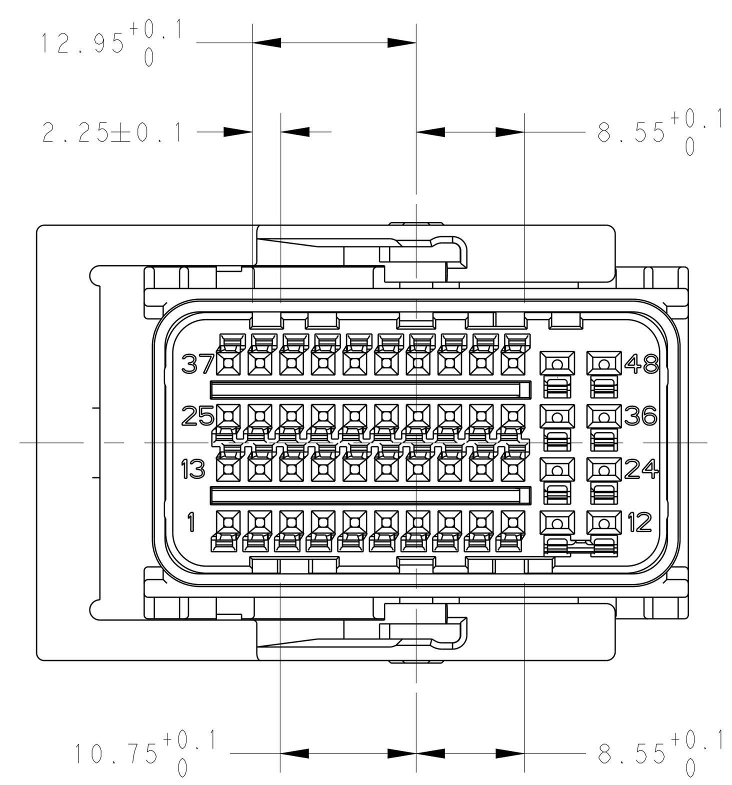

CODING 2
GREY
LEVER LEFT
CABLE EXIT RIGHT
PN 2137291

THIS DRAWING IS A CONTROLLED DOCUMENT.

DIMENSIONS: mm

TOLERANCES UNLESS OTHERWISE SPECIFIED:
0 PLC ±
1 PLC ±0.3
2 PLC ±0.3
3 PLC ±0.3
4 PLC ±0.3
ANGLES ±-

MATERIAL -
FINISH -

DWN	B.PU	26AUG2010
CHK	Y.YANG	26AUG2010
APVD	K.ODA	02NOV2010

PRODUCT SPEC -
APPLICATION SPEC SEE SHEET 1
WEIGHT -

TE Connectivity

NAME 48POS. MIXED RECEPTACLE HOUSING 40xMQS AND 8x1.5
-

SIZE	CAGE CODE	DRAWING NO	RESTRICTED TO
A1	00779	C-2050981	-

CUSTOMER DRAWING | SCALE 1:1 | SHEET 2 OF 6 | REV D5

THIS DRAWING IS UNPUBLISHED. RELEASED FOR PUBLICATION 20
© COPYRIGHT 20 BY - ALL RIGHTS RESERVED.

LOC	DIST
ES	00

REVISIONS

P	LTR	DESCRIPTION	DATE	DWN	APVD
	-	SEE SHEET 1	-	-	-

CODING 3

PINOUT CONFIGURATION

CAVITY NO.		1	2	3	4	5	6	7	8	9	10	11	12	13	14	15	16	17	18	19	20	21	22	23	24	25	26	27	28	29	30	31	32	33	34	35	36	37	38	39	40	41	42	43	44	45	46	47	48
2137492-1	2137292-1	X	X	X	X	X	X	X	X	X	X	X	X	X	X	X	X	X	X	X	X	X	X	X	X	X	X	X	X	X	X	X	X	X	X	X	X	X	X	X	X	X	X	X	X	X	X	X	X
PACKING PN	TE PN (48P MIXED HOUSING)	1	2	3	4	5	6	7	8	9	10	11	12	13	14	15	16	17	18	19	20	21	22	23	24	25	26	27	28	29	30	31	32	33	34	35	36	37	38	39	40	41	42	43	44	45	46	47	48
		BLANKED CAVITIES INDICATE CLOSED LOCATIONS																																															
		WITH "X" MARKED CAVITIES INDICATE OPEN LOCATIONS																																															

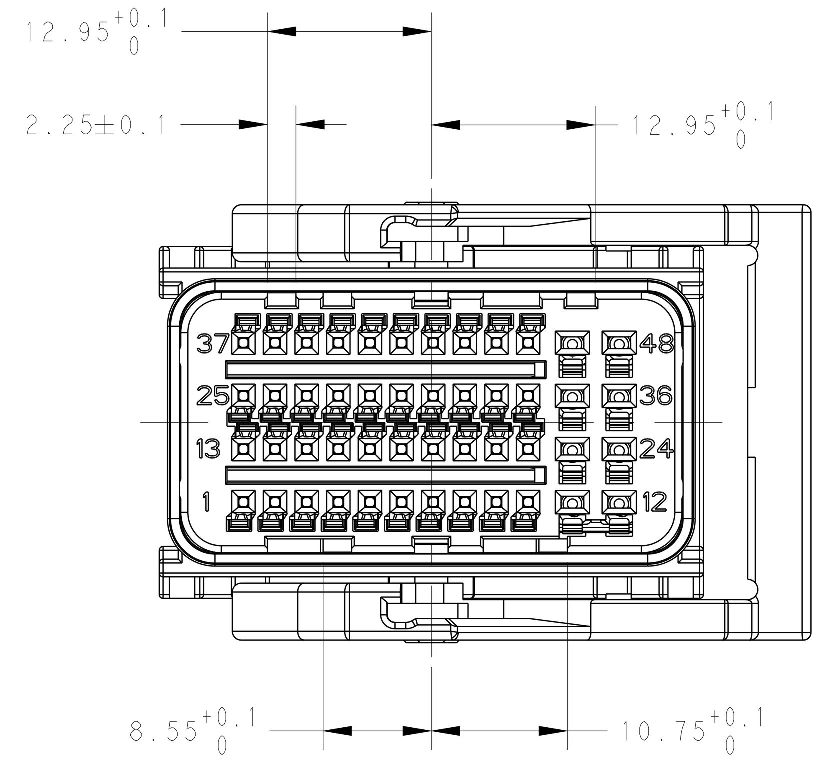

CODING 3
BROWN
LEVER RIGHT
CABLE EXIT LEFT
PN 2137292

CODING 3

PINOUT CONFIGURATION

CAVITY NO.		1	2	3	4	5	6	7	8	9	10	11	12	13	14	15	16	17	18	19	20	21	22	23	24	25	26	27	28	29	30	31	32	33	34	35	36	37	38	39	40	41	42	43	44	45	46	47	48
2137493-1	2137293-1	X	X	X	X	X	X	X	X	X	X	X	X	X	X	X	X	X	X	X	X	X	X	X	X	X	X	X	X	X	X	X	X	X	X	X	X	X	X	X	X	X	X	X	X	X	X	X	X
PACKING PN	TE PN (48P MIXED HOUSING)	1	2	3	4	5	6	7	8	9	10	11	12	13	14	15	16	17	18	19	20	21	22	23	24	25	26	27	28	29	30	31	32	33	34	35	36	37	38	39	40	41	42	43	44	45	46	47	48
		BLANKED CAVITIES INDICATE CLOSED LOCATIONS																																															
		WITH "X" MARKED CAVITIES INDICATE OPEN LOCATIONS																																															

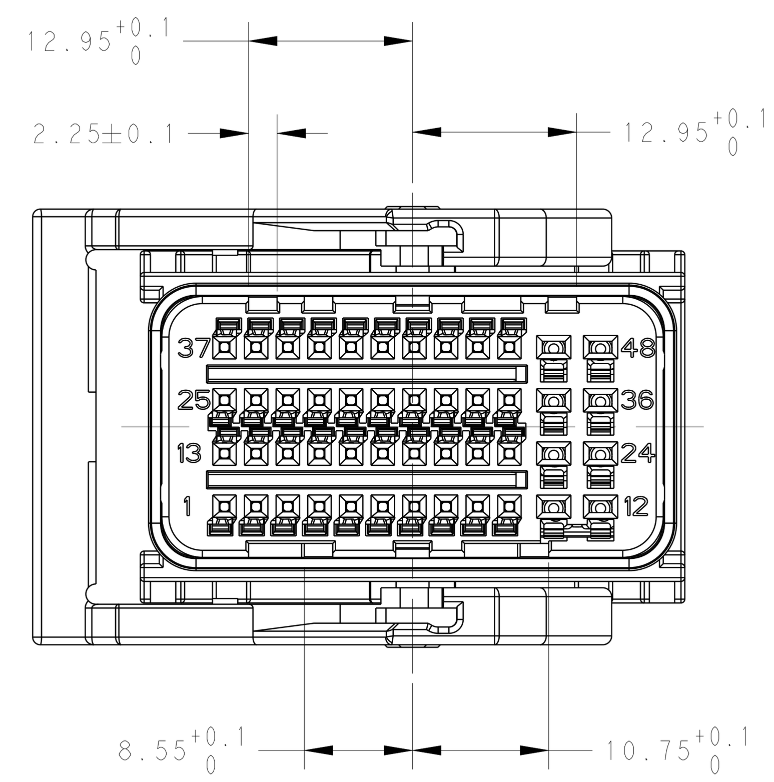

CODING 3
BROWN
LEVER LEFT
CABLE EXIT RIGHT
PN 2137293

THIS DRAWING IS A CONTROLLED DOCUMENT.

DIMENSIONS: mm

TOLERANCES UNLESS OTHERWISE SPECIFIED:
~~0 PLC ±~~
~~1 PLC ±0.3~~
~~2 PLC ±0.3~~
~~3 PLC ±0.3~~
~~4 PLC ±0.3~~
ANGLES ±-

MATERIAL -
FINISH -

DWN B.PU 26AUG2010
CHK Y.YANG 26AUG2010
APVD K.ODA 02NOV2010
PRODUCT SPEC -
APPLICATION SPEC SEE SHEET 1
WEIGHT -

TE Connectivity

NAME 48POS. MIXED RECEPTACLE HOUSING 40xMQS AND 8x1.5 -

SIZE A1 | CAGE CODE 00779 | DRAWING NO C-2050981 | RESTRICTED TO -

CUSTOMER DRAWING | SCALE 1:1 | SHEET 3 OF 6 | REV D5

4805 (3/11)

THIS DRAWING IS UNPUBLISHED. RELEASED FOR PUBLICATION 20
© COPYRIGHT 20 BY - ALL RIGHTS RESERVED.

LOC	DIST
ES	00

REVISIONS						
P	LTR	DESCRIPTION	DATE	DWN	APVD
	-	SEE SHEET 1	-	-	-

CODING 4

PINOUT CONFIGURATION																																																	
CAVITY NO.		1	2	3	4	5	6	7	8	9	10	11	12	13	14	15	16	17	18	19	20	21	22	23	24	25	26	27	28	29	30	31	32	33	34	35	36	37	38	39	40	41	42	43	44	45	46	47	48
2137904-3	2137898-3	X	X	X		X		X	X	X	X		X				X	X	X		X	X		X	X			X	X	X				X	X	X	X			X	X	X		X		X	X	X	X
2137904-2	2137898-2	X		X	X	X					X		X	X		X	X	X	X		X			X	X			X	X	X		X	X			X	X		X	X	X	X	X	X		X	X	X	X
2137904-1	2137898-1	X	X	X	X	X	X	X	X	X	X	X	X	X	X	X	X	X	X	X	X	X	X	X	X	X	X	X	X	X	X	X	X	X	X	X	X	X	X	X	X	X	X	X	X	X	X	X	X
PACKING PN	TE PN (48P MIXED HOUSING)	1	2	3	4	5	6	7	8	9	10	11	12	13	14	15	16	17	18	19	20	21	22	23	24	25	26	27	28	29	30	31	32	33	34	35	36	37	38	39	40	41	42	43	44	45	46	47	48
		BLANKED CAVITIES INDICATE CLOSED LOCATIONS																																															
		WITH "X" MARKED CAVITIES INDICATE OPEN LOCATIONS																																															

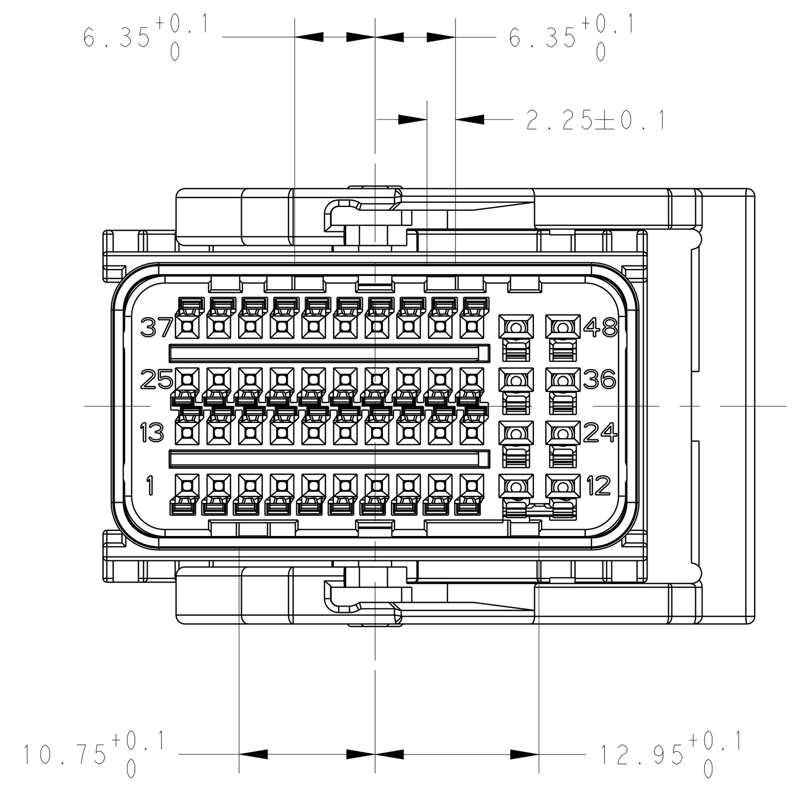

CODING 4
GREEN
LEVER RIGHT
CABLE EXIT LEFT
PN 2137898

CODING 4

PINOUT CONFIGURATION																																																	
CAVITY NO.		1	2	3	4	5	6	7	8	9	10	11	12	13	14	15	16	17	18	19	20	21	22	23	24	25	26	27	28	29	30	31	32	33	34	35	36	37	38	39	40	41	42	43	44	45	46	47	48
2137905-2	2137899-2	X		X	X	X					X		X	X		X	X	X	X		X			X	X			X	X	X		X	X			X	X		X	X	X	X	X	X		X	X	X	X
2137905-1	2137899-1	X	X	X	X	X	X	X	X	X	X	X	X	X	X	X	X	X	X	X	X	X	X	X	X	X	X	X	X	X	X	X	X	X	X	X	X	X	X	X	X	X	X	X	X	X	X	X	X
PACKING PN	TE PN (48P MIXED HOUSING)	1	2	3	4	5	6	7	8	9	10	11	12	13	14	15	16	17	18	19	20	21	22	23	24	25	26	27	28	29	30	31	32	33	34	35	36	37	38	39	40	41	42	43	44	45	46	47	48
		BLANKED CAVITIES INDICATE CLOSED LOCATIONS																																															
		WITH "X" MARKED CAVITIES INDICATE OPEN LOCATIONS																																															

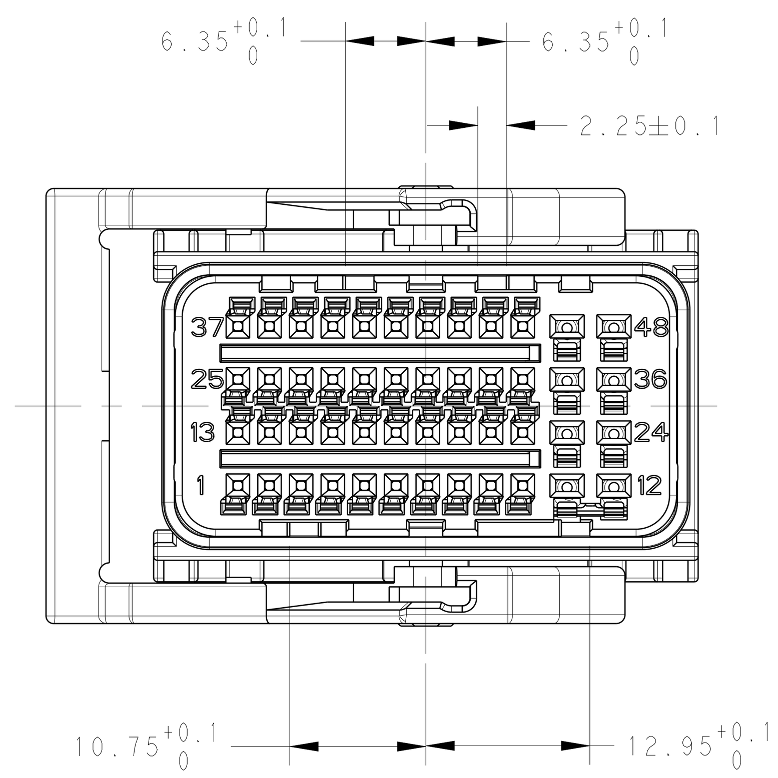

CODING 4
GREEN
LEVER LEFT
CABLE EXIT RIGHT
PN 2137899

THIS DRAWING IS A CONTROLLED DOCUMENT.

DIMENSIONS: mm

TOLERANCES UNLESS OTHERWISE SPECIFIED:
0 PLC ±-
1 PLC ±0.3
2 PLC ±0.3
3 PLC ±0.3
4 PLC ±0.3
ANGLES ±-

MATERIAL - -
FINISH - -

DWN B.PU 26AUG2010
CHK Y.YANG 26AUG2010
APVD K.ODA 02NOV2010
PRODUCT SPEC -
APPLICATION SPEC SEE SHEET 1
WEIGHT -

TE Connectivity

NAME 48POS. MIXED RECEPTACLE HOUSING 40xMQS AND 8x1.5 -

SIZE A1 | CAGE CODE 00779 | DRAWING NO C-2050981 | RESTRICTED TO -

CUSTOMER DRAWING | SCALE 1:1 | SHEET 4 OF 6 | REV D5

4805 (3/11)

THIS DRAWING IS UNPUBLISHED. RELEASED FOR PUBLICATION 20
© COPYRIGHT 20 BY - ALL RIGHTS RESERVED.

LOC	DIST
ES	00

REVISIONS					
P	LTR	DESCRIPTION	DATE	DWN	APVD
	-	SEE SHEET 1	-	-	-

CODING 5

PINOUT CONFIGURATION																																																	
CAVITY NO.		1	2	3	4	5	6	7	8	9	10	11	12	13	14	15	16	17	18	19	20	21	22	23	24	25	26	27	28	29	30	31	32	33	34	35	36	37	38	39	40	41	42	43	44	45	46	47	48
2137906-1	2137900-1	X	X	X	X	X	X	X	X	X	X	X	X	X	X	X	X	X	X	X	X	X	X	X	X	X	X	X	X	X	X	X	X	X	X	X	X	X	X	X	X	X	X	X	X	X	X	X	X
PACKING PN	TE PN (48P MIXED HOUSING)	1	2	3	4	5	6	7	8	9	10	11	12	13	14	15	16	17	18	19	20	21	22	23	24	25	26	27	28	29	30	31	32	33	34	35	36	37	38	39	40	41	42	43	44	45	46	47	48
		BLANKED CAVITIES INDICATE CLOSED LOCATIONS																																															
		WITH "X" MARKED CAVITIES INDICATE OPEN LOCATIONS																																															

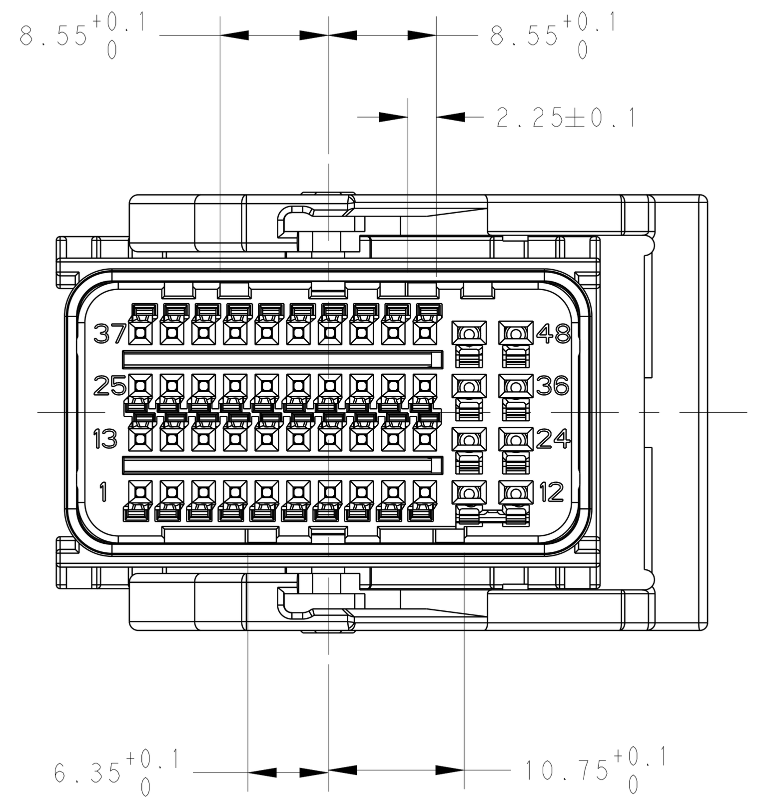

CODING 5
BLUE
LEVER RIGHT
CABLE EXIT LEFT
PN 2137900

CODING 5

PINOUT CONFIGURATION																																																	
CAVITY NO.		1	2	3	4	5	6	7	8	9	10	11	12	13	14	15	16	17	18	19	20	21	22	23	24	25	26	27	28	29	30	31	32	33	34	35	36	37	38	39	40	41	42	43	44	45	46	47	48
2137907-1	2137901-1	X	X	X	X	X	X	X	X	X	X	X	X	X	X	X	X	X	X	X	X	X	X	X	X	X	X	X	X	X	X	X	X	X	X	X	X	X	X	X	X	X	X	X	X	X	X	X	X
PACKING PN	TE PN (48P MIXED HOUSING)	1	2	3	4	5	6	7	8	9	10	11	12	13	14	15	16	17	18	19	20	21	22	23	24	25	26	27	28	29	30	31	32	33	34	35	36	37	38	39	40	41	42	43	44	45	46	47	48
		BLANKED CAVITIES INDICATE CLOSED LOCATIONS																																															
		WITH "X" MARKED CAVITIES INDICATE OPEN LOCATIONS																																															

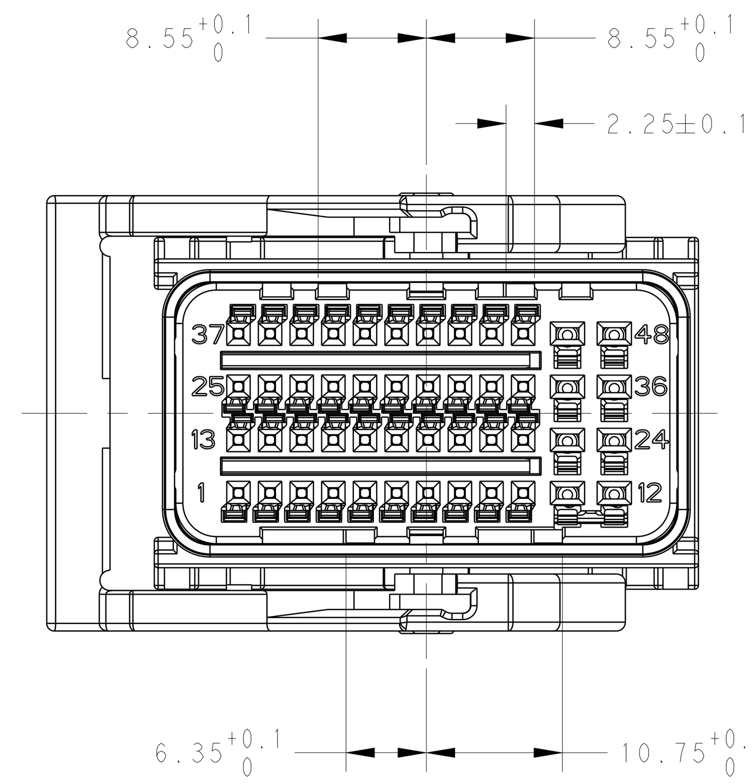

CODING 5
BLUE
LEVER LEFT
CABLE EXIT RIGHT
PN 2137901

THIS DRAWING IS A CONTROLLED DOCUMENT.

DIMENSIONS: mm

TOLERANCES UNLESS OTHERWISE SPECIFIED:
~~0 PLC ±~~
~~1 PLC ±0.3~~
~~2 PLC ±0.3~~
~~3 PLC ±0.3~~
~~4 PLC ±0.3~~
ANGLES ±-

MATERIAL - -
FINISH - -

DWN B.PU 26AUG2010
CHK Y.YANG 26AUG2010
APVD K.ODA 02NOV2010
PRODUCT SPEC -
APPLICATION SPEC SEE SHEET 1
WEIGHT -

TE Connectivity

NAME 48POS. MIXED RECEPTACLE HOUSING 40xMQS AND 8x1.5 -

SIZE	CAGE CODE	DRAWING NO	RESTRICTED TO
A1	00779	C-2050981	-

CUSTOMER DRAWING | SCALE 1:1 | SHEET 5 OF 6 | REV D5

4805 (3/11)