HAOYU

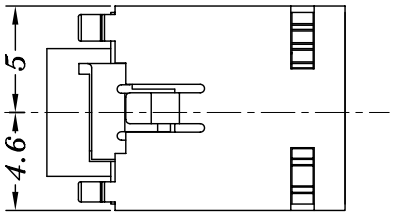

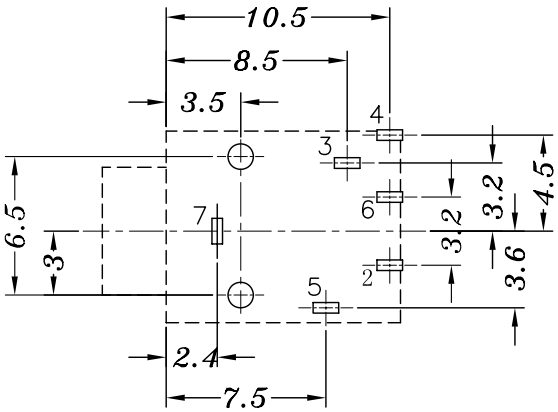

P.C.B LAYOUT
TOP VIEW

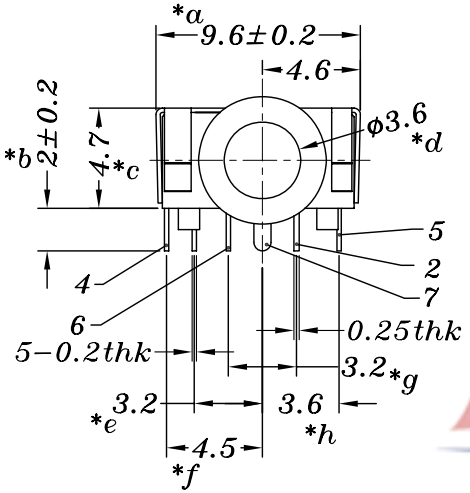

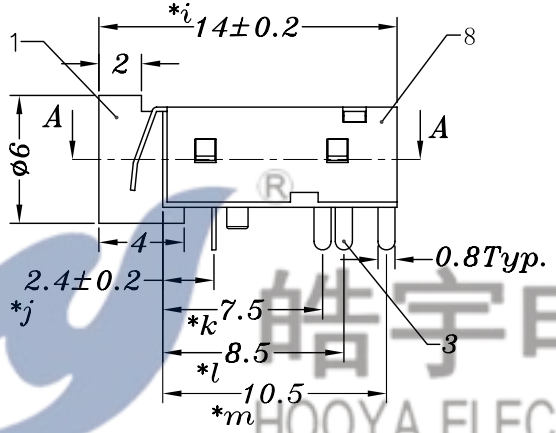

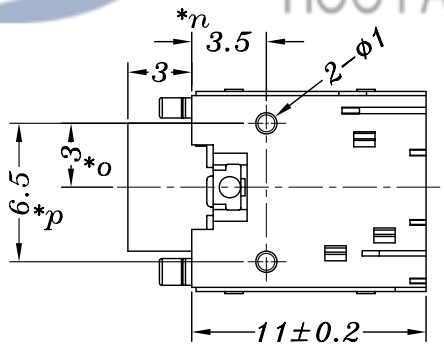

SCHEMATIC

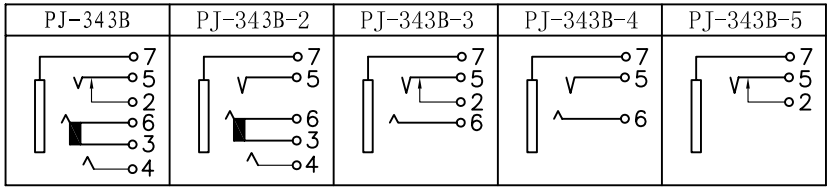

NO.	PART NAME	MATERIAL	QTY	FINISHING
8	COAT	SUS	1	Ni-PLATED
7	PJ-343 7#CONTACT FOOT	PBS	1	Ag-PLATED
6	PJ-362 6#SPRING	SUS	1	Ag-PLATED
5	PJ-362 5#SPRING	PBS	1	Ag-PLATED
4	PJ-343 4#CURVE PIECE	PBS	1	Ag-PLATED
3	PJ-343 3#CONTACT FOOT	SUS	1	Ag-PLATED
2	PJ-362 2#CONTACT FOOT	BRASS	1	Ag-PLATED
1	PJ-343 CASE	PA9T	1	BLACK/GREEN/PINK/RED

TOLERANCE UNLESS SPECIFIED
UP TO 5mm: ±0.1
ABOVE 5mm: ±0.2
ANGULAR ±1°

NO	DATE	REVISIONS	BY	APPD
1	2015-11-21	修正线路图	liu	

TITLE: PHONE JACK
MODEL: PJ-343B
UNIT : MM
SCALE: 3:1
ROHS COMPLIANT
DWN
CHK'D
APPD
PRO.AGL:
REV : A

HAOYU(HONGKONG)LIMITED
皓宇(香港)有限公司

皓宇电子
HOOYA ELECTRONICS