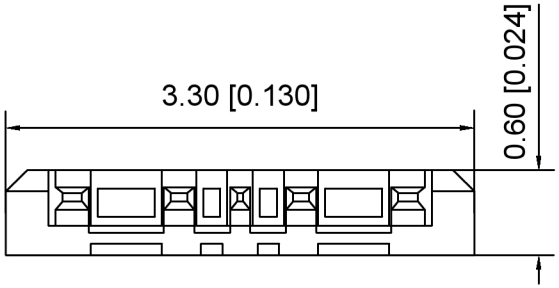

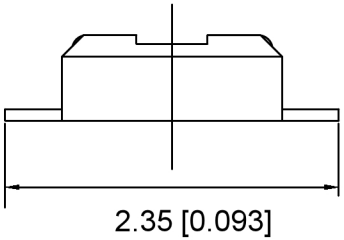

Specifications:
规格：
Voltage rating:30V AC/DC
额定电压：30V AC/DC
Current rating:3A AC/DC
额定电流：3A AC/DC
Withstanding voltage:100V AC/minute
耐受电压：100V AC/分钟
Temperature range:-25℃-+85℃
温度范围：-25℃-+85℃
Insulation resistance：500MΩ min
绝缘电阻：500MΩ Min
Contact resistance:50mΩ Max
接触电阻：50mΩ Max

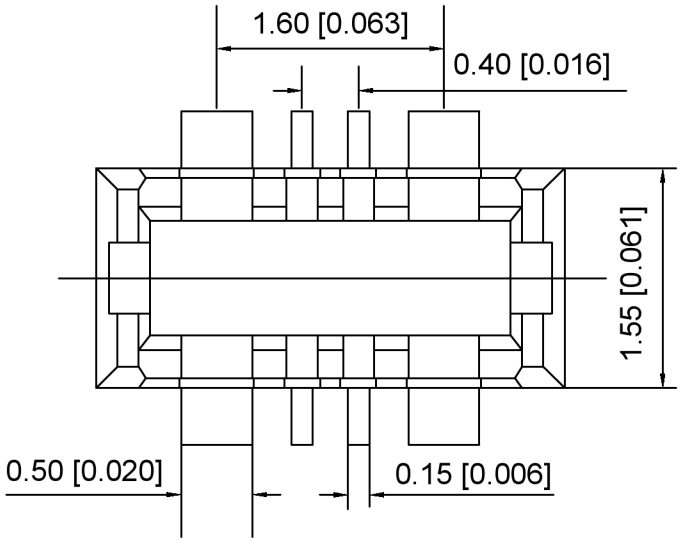

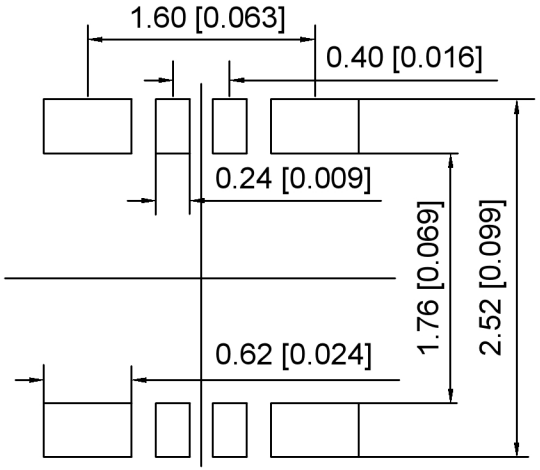

Recommended PCB Layout

X0405 W V S - XX X -LP V01
① ②③④⑤⑥⑦ ⑧

1.Series No
2.Category:W-Wafer
3.Welding Board Angle:V-Straight 180°
4.Welding Way:S-SMT
5.Row No.Pin No:XX-08Pin-XXPin
6.High:A=0.6mm,
Mating Height 0.8mm
7.Material:LP-LCP UL 94V-0 Black
8.Plating:V01-Gold Flash ;
SN-Tin Plating

X0405WVS-XXX-LPV01	LCP UL 94V-0	Copper Alloy	X0405F
PART NO	Material	Material(Pin)	Suitable XKB Female

广东星坤科技股份有限公司
生效日期
文件工程章

MARK	DESCRIPTION	DATE	REVISED	APPROVED
Δx				
Δx				
Δx				

REVISIONS

UNSPECIFIED TOLERANCES	
ANGLAR	±5°
L≤ 4	±0.2
4<L≤ 16	±0.3
16<L≤ 63	±0.4
L> 63	±0.5

www.helloxkb.com www.helloxkb.cn www.xk-dg.cn

XKB INDUSTRIAL PRECISION CO.,LIMITED

DSND		SCALE: N/A	MODEL TYPE: 0.4mm BTB Style Connector
DWN		VIEW:	PART NO.: X0405WVS-XXX-LPV01
CHKD		UNIT: mm/in	DWG NO.: X-X0405WVS-XXX-LPV01
APPD		SIZE: A4	

WEIGHT	SHEET	REVISION
	1/1	A0