由 Autodesk 教育版产品制作

HAOYU

TEPROOF LEVEL: IPX7

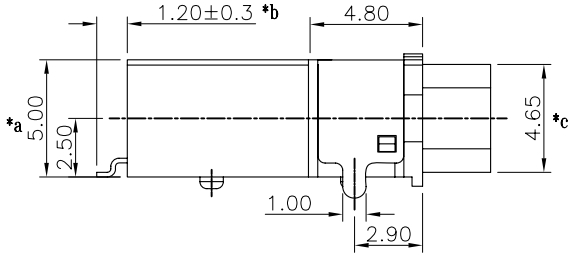

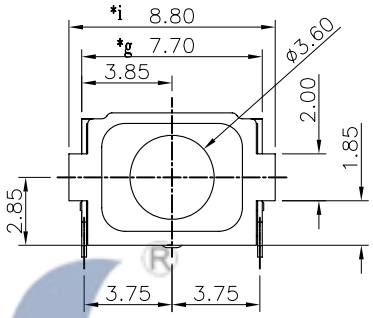

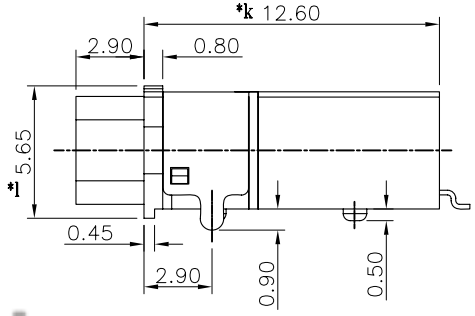

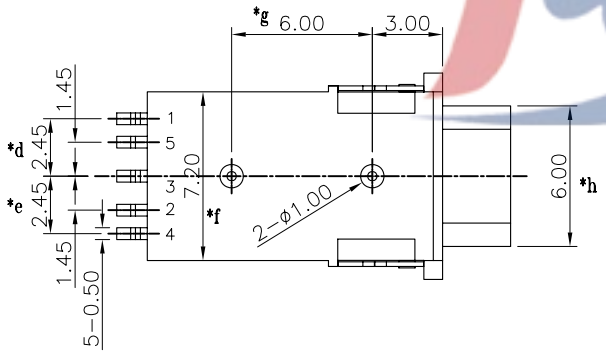

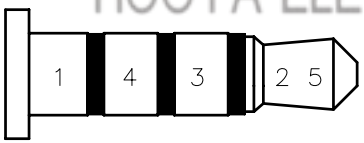

(ø3.50mm 4 POLE PLUG DETAIL DRAWING)

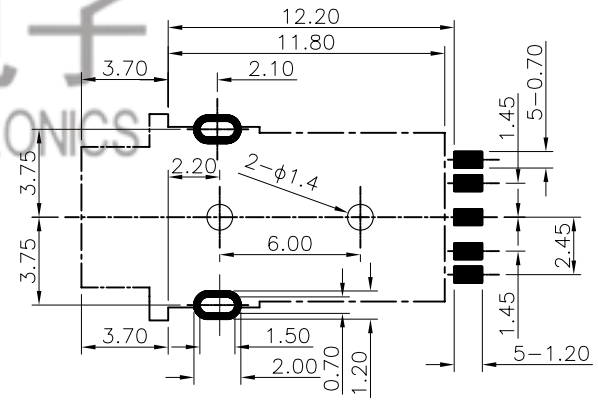

P.C.B LAYOUT
TOP VIEW

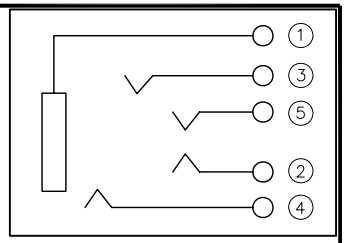

SCHEMATIC

皓宇电子
HOOYA ELECTRONICS

NO.	PART NAME	MATERIAL	QTY	FINISHING
7	TERMINAL 6#	PBS	1	NI/AU-PLATED
6	TERMINAL 5#	PBS	1	NI/AU-PLATED
5	TERMINAL 4#	PBS	1	NI/AU-PLATED
4	TERMINAL 3#	PBS	1	NI/AU-PLATED
3	TERMINAL 2#	PBS	1	NI/AU-PLATED
2	TERMINAL 1#	PBS	1	NI-PLATED
1	HOUSING	PA6T	1	

TOLERANCE UNLESS SPECIFIED
UP TO 5mm: ±0.1
ABOVE 5mm: ±0.2
ANGULAR ±1°

NO	DATE	REVISIONS	BY	APPD
1				

TITLE: PHONE JACK
MODEL: PJ-3147A
UNIT : MM
SCALE: 1:1
ROHS COMPLIANT

HAOYU(HONGKONG)LIMITED
皓宇(香港)有限公司

DWN
CHK'D
APPD
PRO.AGL:
REV :A0

由 Autodesk 教育版产品制作
由 Autodesk 教育版产品制作
由 Autodesk 教育版产品制作