Innovative Service Around the Globe YAGEO

DATA SHEET

SURFACE MOUNT MULTILAYER CERAMIC CAPACITORS

Automotive grade

NP0/X7R

6.3 V TO 630 V

0.2 pF to 2.2 µF

RoHS compliant & Halogen Free

Product Specification – February 26, 2019 V.12

YAGEO Phycomp

SCOPE

This specification describes Automotive grade NP0/X7R series chip capacitors with lead-free terminations and used for automotive equipments.

APPLICATIONS

All general purpose applications
Entertainment applications
Comfort / security applications
Information applications

FEATURES

- AEC-Q200 qualified
- MSL class: MSL 1
- AC series soldering is compliant with J-STD-020D
- Halogen free epoxy
- RoHS compliant
- Reduce environmentally hazardous waste
- High component and equipment reliability
- Save PCB space
- The capacitors are 100% performed by automatic optical inspection prior to taping.

ORDERING INFORMATION - GLOBAL PART NUMBER

All part numbers are identified by the series, size, tolerance, TC material, packing style, voltage, process code, termination and capacitance value.

GLOBAL PART NUMBER

AC	XXXX	X	X	XXX	X	B	X	XXX
	(1)	(2)	(3)	(4)	(5)		(6)	(7)

(1) SIZE – INCH BASED (METRIC)

0201 (0603) / 0402 (1005) / 0603 (1608) / 0805 (2012) / 1206 (3216)/ 1210 (3225) / 0508 (1220) / 0612 (1632)

(2) TOLERANCE

B = ±0.1 pF
C = ±0.25 pF
D = ±0.5 pF
F = ±1%
G = ±2%
J = ±5%
K = ±10%
M = ±20%

(3) PACKING STYLE

R = Paper/PE taping reel; Reel 7 inch
K = Blister taping reel; Reel 7 inch
P = Paper/PE taping reel; Reel 13 inch
F = Blister taping reel; Reel 13 inch

(4) TC MATERIAL

NPO
X7R

(5) RATED VOLTAGE

5 = 6.3 V
6 = 10 V
7 = 16 V
8 = 25 V
9 = 50 V
0 = 100 V
A = 200 V
Y = 250 V
B = 500 V
Z = 630 V

(6) PROCESS

N = NP0
B = Class 2 MLCC

(7) CAPACITANCE VALUE

2 significant digits+number of zeros
The 3rd digit signifies the multiplying factor, and letter R is decimal point
Example: 121 = 12 x 10^1 = 120 pF

CONSTRUCTION

The capacitor consists of a rectangular block of ceramic dielectric in which a number of interleaved metal electrodes are contained. This structure gives rise to a high capacitance per unit volume.

The inner electrodes are connected to the two end terminations and finally covered with a layer of plated tin (Matte Sn). The terminations are lead-free. A cross section of the structure is shown in Fig.1.

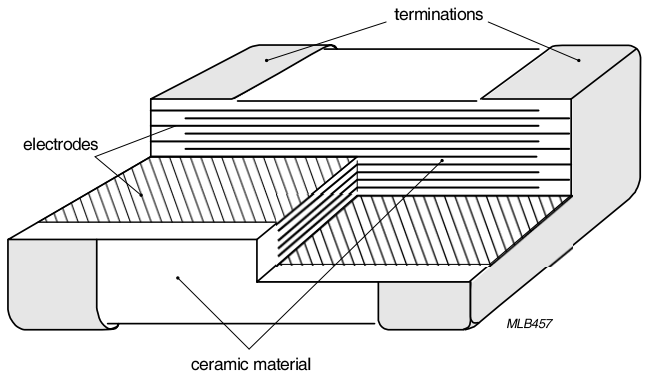

Fig. 1 Surface mounted multilayer ceramic capacitor construction

DIMENSION

Table 1 For outlines see fig. 2

TYPE	L_1 (mm)	W (mm)	T (MM)	L_2 / L_3 (mm) min.	L_2 / L_3 (mm) max.	L_4 (mm) min.
0201	0.6 ±0.03	0.3 ±0.03	Refer to table 3 to 12	0.10	0.20	0.20
0402	1.0 ±0.05	0.5 ±0.05		0.15	0.30	0.40
0603	1.6 ±0.10	0.8 ±0.10		0.20	0.60	0.40
0805	2.0 ±0.20	1.25 ±0.20		0.25	0.75	0.70
1206	3.2 ±0.30	1.6 ±0.20		0.25	0.75	1.40
1210	3.2 ±0.30	2.5 ±0.20		0.25	0.75	1.40
1812	4.5±0.40	3.2±0.40		0.25	0.75	2.20

OUTLINES

For dimension see Table 1

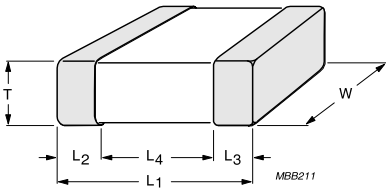

Fig. 2 Surface mounted multilayer ceramic capacitor dimension

Table 2 For outlines see fig. 3

TYPE	0508 (4 X 0402)	0612 (4 X 0603)
L (mm)	2.0 ±0.15	3.2 ±0.15
W (mm)	1.25 ±0.15	1.60 ±0.15
$T_{min.}$ (mm)	0.50	0.70
$T_{max.}$ (mm)	0.70	0.90
A (mm)	0.28 ±0.10	0.4 ±0.10
B (mm)	0.2 ±0.10	0.3 ±0.20
P (mm)	0.5 ±0.10	0.8 ±0.10

OUTLINES

For dimensions see Table 2

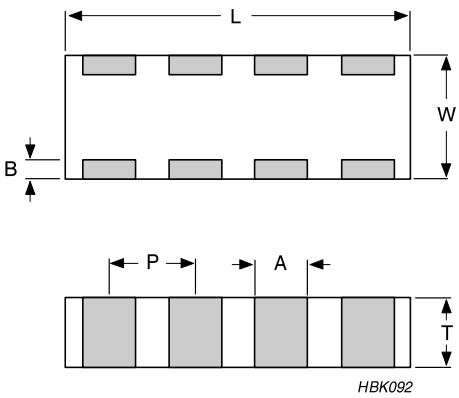

Fig. 3 Surface mounted multilayer ceramic capacitor dimension

CAPACITANCE RANGE & THICKNESS FOR NP0

Table 3 Sizes from 0201 to 0805

CAP.	0201	0402	0603			0805		
	25 V / 50 V	50 V	50 V	100 V	250 V	50 V	100 V	250V
0.2 pF	0.3±0.03							
0.47 pF	0.3±0.03	0.5±0.05	0.8±0.1	0.8±0.1	0.8±0.1	0.6±0.1	0.6±0.1	0.6±0.1
0.56 pF	0.3±0.03	0.5±0.05	0.8±0.1	0.8±0.1	0.8±0.1	0.6±0.1	0.6±0.1	0.6±0.1
0.68 pF	0.3±0.03	0.5±0.05	0.8±0.1	0.8±0.1	0.8±0.1	0.6±0.1	0.6±0.1	0.6±0.1
0.82 pF	0.3±0.03	0.5±0.05	0.8±0.1	0.8±0.1	0.8±0.1	0.6±0.1	0.6±0.1	0.6±0.1
1.0 pF	0.3±0.03	0.5±0.05	0.8±0.1	0.8±0.1	0.8±0.1	0.6±0.1	0.6±0.1	0.6±0.1
1.2 pF	0.3±0.03	0.5±0.05	0.8±0.1	0.8±0.1	0.8±0.1	0.6±0.1	0.6±0.1	0.6±0.1
1.5 pF	0.3±0.03	0.5±0.05	0.8±0.1	0.8±0.1	0.8±0.1	0.6±0.1	0.6±0.1	0.6±0.1
1.8 pF	0.3±0.03	0.5±0.05	0.8±0.1	0.8±0.1	0.8±0.1	0.6±0.1	0.6±0.1	0.6±0.1
2.2 pF	0.3±0.03	0.5±0.05	0.8±0.1	0.8±0.1	0.8±0.1	0.6±0.1	0.6±0.1	0.6±0.1
2.7 pF	0.3±0.03	0.5±0.05	0.8±0.1	0.8±0.1	0.8±0.1	0.6±0.1	0.6±0.1	0.6±0.1
3.3 pF	0.3±0.03	0.5±0.05	0.8±0.1	0.8±0.1	0.8±0.1	0.6±0.1	0.6±0.1	0.6±0.1
3.9 pF	0.3±0.03	0.5±0.05	0.8±0.1	0.8±0.1	0.8±0.1	0.6±0.1	0.6±0.1	0.6±0.1
4.7 pF	0.3±0.03	0.5±0.05	0.8±0.1	0.8±0.1	0.8±0.1	0.6±0.1	0.6±0.1	0.6±0.1
5.6 pF	0.3±0.03	0.5±0.05	0.8±0.1	0.8±0.1	0.8±0.1	0.6±0.1	0.6±0.1	0.6±0.1
6.8 pF	0.3±0.03	0.5±0.05	0.8±0.1	0.8±0.1	0.8±0.1	0.6±0.1	0.6±0.1	0.6±0.1
8.2 pF	0.3±0.03	0.5±0.05	0.8±0.1	0.8±0.1	0.8±0.1	0.6±0.1	0.6±0.1	0.6±0.1
10 pF	0.3±0.03	0.5±0.05	0.8±0.1	0.8±0.1	0.8±0.1	0.6±0.1	0.6±0.1	0.6±0.1
12 pF	0.3±0.03	0.5±0.05	0.8±0.1	0.8±0.1	0.8±0.1	0.6±0.1	0.6±0.1	0.6±0.1
15 pF	0.3±0.03	0.5±0.05	0.8±0.1	0.8±0.1	0.8±0.1	0.6±0.1	0.6±0.1	0.6±0.1
18 pF	0.3±0.03	0.5±0.05	0.8±0.1	0.8±0.1	0.8±0.1	0.6±0.1	0.6±0.1	0.6±0.1
22 pF	0.3±0.03	0.5±0.05	0.8±0.1	0.8±0.1	0.8±0.1	0.6±0.1	0.6±0.1	0.6±0.1
27 pF	0.3±0.03	0.5±0.05	0.8±0.1	0.8±0.1	0.8±0.1	0.6±0.1	0.6±0.1	0.6±0.1
33 pF	0.3±0.03	0.5±0.05	0.8±0.1	0.8±0.1	0.8±0.1	0.6±0.1	0.6±0.1	0.6±0.1
39 pF		0.5±0.05	0.8±0.1	0.8±0.1	0.8±0.1	0.6±0.1	0.6±0.1	0.6±0.1
47 pF		0.5±0.05	0.8±0.1	0.8±0.1	0.8±0.1	0.6±0.1	0.6±0.1	0.6±0.1
56 pF		0.5±0.05	0.8±0.1	0.8±0.1	0.8±0.1	0.6±0.1	0.6±0.1	0.6±0.1
68 pF		0.5±0.05	0.8±0.1	0.8±0.1	0.8±0.1	0.6±0.1	0.6±0.1	0.6±0.1
82 pF		0.5±0.05	0.8±0.1	0.8±0.1	0.8±0.1	0.6±0.1	0.6±0.1	0.6±0.1
100 pF		0.5±0.05	0.8±0.1	0.8±0.1	0.8±0.1	0.6±0.1	0.6±0.1	0.6±0.1

NOTE

1. Values in shaded cells indicate thickness class in mm
2. Capacitance value of non E-12 series is on request

CAPACITANCE RANGE & THICKNESS FOR NP0

Table 4 Sizes from 0402 to 0805 (continued)

CAP.	0402	0603			0805		
	50 V	50 V	100 V	250 V	50 V	100 V	250 V
120 pF	0.5±0.05	0.8±0.1	0.8±0.1	0.8±0.1	0.6±0.1	0.6±0.1	0.6±0.1
150 pF	0.5±0.05	0.8±0.1	0.8±0.1	0.8±0.1	0.6±0.1	0.6±0.1	0.6±0.1
180 pF	0.5±0.05	0.8±0.1	0.8±0.1	0.8±0.1	0.6±0.1	0.6±0.1	0.6±0.1
220 pF	0.5±0.05	0.8±0.1	0.8±0.1	0.8±0.1	0.6±0.1	0.6±0.1	0.85±0.1
270 pF	0.5±0.05	0.8±0.1	0.8±0.1	0.8±0.1	0.6±0.1	0.6±0.1	0.85±0.1
330 pF	0.5±0.05	0.8±0.1	0.8±0.1	0.8±0.1	0.6±0.1	0.6±0.1	0.85±0.1
390 pF	0.5±0.05	0.8±0.1	0.8±0.1	0.8±0.1	0.6±0.1	0.6±0.1	0.85±0.1
470 pF	0.5±0.05	0.8±0.1	0.8±0.1	0.8±0.1	0.6±0.1	0.6±0.1	0.85±0.1
560 pF	0.5±0.05	0.8±0.1	0.8±0.1	0.8±0.1	0.6±0.1	0.85±0.1	0.85±0.1
680 pF	0.5±0.05	0.8±0.1	0.8±0.1	0.8±0.1	0.6±0.1	0.85±0.1	0.85±0.1
820 pF	0.5±0.05	0.8±0.1	0.8±0.1		0.6±0.1	0.85±0.1	0.85±0.1
1.0 nF	0.5±0.05	0.8±0.1	0.8±0.1		0.6±0.1	0.85±0.1	0.85±0.1
1.2 nF					0.85±0.1	0.85±0.1	
1.5 nF					0.85±0.1	0.85±0.1	
1.8 nF					0.85±0.1	0.85±0.1	
2.2 nF					1.25±0.2	1.25±0.2	
2.7 nF					1.25±0.2	1.25±0.2	
3.3 nF					1.25±0.2	1.25±0.2	
3.9 nF					1.25±0.2	1.25±0.2	
4.7 nF					1.25±0.2	1.25±0.2	
5.6 nF					1.25±0.2	1.25±0.2	
6.8 nF					1.25±0.2	1.25±0.2	
8.2 nF					1.25±0.2	1.25±0.2	
10 nF					1.25±0.2	1.25±0.2	

NOTE

1. Values in shaded cells indicate thickness class in mm
2. Capacitance value of non E-12 series is on request

CAPACITANCE RANGE & THICKNESS FOR NP0

Table 5 Sizes from 1206 to 1210

CAP.	1206					1210			
	50 V	100 V	250 V	500 V	630 V	50 V	100 V	250 V	500 V
10 pF	0.6±0.1	0.6±0.1	0.6±0.1	0.6±0.1	1.25±0.2				
12 pF	0.6±0.1	0.6±0.1	0.6±0.1	0.6±0.1	1.25±0.2				
15 pF	0.6±0.1	0.6±0.1	0.6±0.1	0.6±0.1	1.25±0.2				
18 pF	0.6±0.1	0.6±0.1	0.6±0.1	0.6±0.1	1.25±0.2				
22 pF	0.6±0.1	0.6±0.1	0.6±0.1	0.6±0.1	1.25±0.2				
27 pF	0.6±0.1	0.6±0.1	0.6±0.1	0.6±0.1	1.25±0.2				
33 pF	0.6±0.1	0.6±0.1	0.6±0.1	0.6±0.1	1.25±0.2				
39 pF	0.6±0.1	0.6±0.1	0.6±0.1	0.6±0.1	1.25±0.2				
47 pF	0.6±0.1	0.6±0.1	0.6±0.1	0.6±0.1	1.25±0.2				
56 pF	0.6±0.1	0.6±0.1	0.6±0.1	0.6±0.1	1.25±0.2				
68 pF	0.6±0.1	0.6±0.1	0.6±0.1	0.6±0.1	1.25±0.2				
82 pF	0.6±0.1	0.6±0.1	0.6±0.1	0.6±0.1	1.25±0.2				
100 pF	0.6±0.1	0.6±0.1	0.6±0.1	0.6±0.1	1.25±0.2				
120 pF	0.6±0.1	0.6±0.1	0.6±0.1	0.6±0.1	1.25±0.2				
150 pF	0.6±0.1	0.6±0.1	0.6±0.1	0.6±0.1	1.25±0.2				
180 pF	0.6±0.1	0.6±0.1	0.6±0.1	0.6±0.1	1.25±0.2				
220 pF	0.6±0.1	0.6±0.1	0.6±0.1	0.6±0.1	1.25±0.2				
270 pF	0.6±0.1	0.6±0.1	0.6±0.1	0.6±0.1	1.25±0.2				
330 pF	0.6±0.1	0.6±0.1	0.6±0.1	0.6±0.1	1.25±0.2				
390 pF	0.6±0.1	0.6±0.1	0.6±0.1	0.6±0.1	1.25±0.2				
470 pF	0.6±0.1	0.6±0.1	0.6±0.1	0.6±0.1	1.25±0.2				
560 pF	0.6±0.1	0.6±0.1	0.6±0.1	0.6±0.1	1.25±0.2				
680 pF	0.6±0.1	0.6±0.1	0.6±0.1	0.6±0.1	1.25±0.2				
820 pF	0.6±0.1	0.6±0.1	0.85±0.1	0.85±0.1	1.25±0.2				
1.0 nF	0.6±0.1	0.6±0.1	0.85±0.1	0.85±0.1	1.25±0.2	1.25±0.2	1.25±0.2	1.25±0.2	1.25±0.2
1.2 nF	0.6±0.1	0.6±0.1	0.85±0.1			1.25±0.2	1.25±0.2	1.25±0.2	1.25±0.2
1.5 nF	0.6±0.1	0.6±0.1	0.85±0.1			1.25±0.2	1.25±0.2	1.25±0.2	1.25±0.2
1.8 nF	0.6±0.1	0.6±0.1				1.25±0.2	1.25±0.2	1.25±0.2	1.25±0.2
2.2 nF	0.6±0.1	0.6±0.1				1.25±0.2	1.25±0.2	1.25±0.2	
2.7 nF	0.6±0.1	0.6±0.1				1.25±0.2	1.25±0.2	1.25±0.2	

NOTE

1. Values in shaded cells indicate thickness class in mm
2. Capacitance value of non E-12 series is on request

CAPACITANCE RANGE & THICKNESS FOR X7R

Table 6 Sizes from 0201 to 0603

CAP.	0201		0402					0603				
	25V	50 V	10V	16 V	25 V	50 V	100 V	10V	16 V	25 V	50 V	100 V
100 pF	0.3±0.03	0.3±0.03										
150 pF	0.3±0.03	0.3±0.03										
220 pF	0.3±0.03	0.3±0.03	0.5±0.05	0.5±0.05	0.5±0.05	0.5±0.05	0.5±0.05					
330 pF	0.3±0.03	0.3±0.03	0.5±0.05	0.5±0.05	0.5±0.05	0.5±0.05	0.5±0.05					
470 pF	0.3±0.03	0.3±0.03	0.5±0.05	0.5±0.05	0.5±0.05	0.5±0.05	0.5±0.05					
680 pF	0.3±0.03	0.3±0.03	0.5±0.05	0.5±0.05	0.5±0.05	0.5±0.05	0.5±0.05					
1.0 nF	0.3±0.03	0.3±0.03	0.5±0.05	0.5±0.05	0.5±0.05	0.5±0.05	0.5±0.05	0.8±0.1	0.8±0.1	0.8±0.1	0.8±0.1	0.8±0.1
1.5 nF	0.3±0.03		0.5±0.05	0.5±0.05	0.5±0.05	0.5±0.05	0.5±0.05	0.8±0.1	0.8±0.1	0.8±0.1	0.8±0.1	0.8±0.1
2.2 nF	0.3±0.03		0.5±0.05	0.5±0.05	0.5±0.05	0.5±0.05		0.8±0.1	0.8±0.1	0.8±0.1	0.8±0.1	0.8±0.1
3.3 nF	0.3±0.03		0.5±0.05	0.5±0.05	0.5±0.05	0.5±0.05		0.8±0.1	0.8±0.1	0.8±0.1	0.8±0.1	0.8±0.1
4.7 nF	0.3±0.03		0.5±0.05	0.5±0.05	0.5±0.05	0.5±0.05		0.8±0.1	0.8±0.1	0.8±0.1	0.8±0.1	0.8±0.1
6.8 nF	0.3±0.03		0.5±0.05	0.5±0.05	0.5±0.05	0.5±0.05		0.8±0.1	0.8±0.1	0.8±0.1	0.8±0.1	0.8±0.1
10 nF	0.3±0.03		0.5±0.05	0.5±0.05	0.5±0.05	0.5±0.05		0.8±0.1	0.8±0.1	0.8±0.1	0.8±0.1	0.8±0.1
15 nF			0.5±0.05	0.5±0.05	0.5±0.05			0.8±0.1	0.8±0.1	0.8±0.1	0.8±0.1	0.8±0.1
22 nF			0.5±0.05	0.5±0.05	0.5±0.05			0.8±0.1	0.8±0.1	0.8±0.1	0.8±0.1	0.8±0.1
33 nF			0.5±0.05	0.5±0.05	0.5±0.05			0.8±0.1	0.8±0.1	0.8±0.1	0.8±0.1	0.8±0.1
47 nF			0.5±0.05	0.5±0.05	0.5±0.05			0.8±0.1	0.8±0.1	0.8±0.1	0.8±0.1	0.8±0.1
68 nF			0.5±0.05	0.5±0.05	0.5±0.05			0.8±0.1	0.8±0.1	0.8±0.1	0.8±0.1	
100 nF			0.5±0.05	0.5±0.05	0.5±0.05			0.8±0.1	0.8±0.1	0.8±0.1	0.8±0.1	
150 nF								0.8±0.1	0.8±0.1	0.8±0.1		
220 nF								0.8±0.1	0.8±0.1	0.8±0.1		
330 nF								0.8±0.1	0.8±0.1			
470 nF								0.8±0.1	0.8±0.1			
680 nF								0.8±0.1	0.8±0.1			
1 μF								0.8±0.1	0.8±0.1	0.8±0.1		

NOTE

1. Values in shaded cells indicate thickness class in mm
2. Capacitance value of non E-6 series is on request

CAPACITANCE RANGE & THICKNESS FOR X7R

Table 8 Size 0805

CAP.	0805						
	10 V	16 V	25 V	50 V	100 V	250 V	500 V
1.0 nF	0.85±0.1	0.85±0.1	0.85±0.1	0.85±0.1	0.85±0.1	0.85±0.1	0.85±0.1
1.5 nF	0.85±0.1	0.85±0.1	0.85±0.1	0.85±0.1	0.85±0.1	0.85±0.1	0.85±0.1
2.2 nF	0.85±0.1	0.85±0.1	0.85±0.1	0.85±0.1	0.85±0.1	0.85±0.1	0.85±0.1
3.3 nF	0.85±0.1	0.85±0.1	0.85±0.1	0.85±0.1	0.85±0.1	0.85±0.1	0.85±0.1
4.7 nF	0.85±0.1	0.85±0.1	0.85±0.1	0.85±0.1	0.85±0.1	0.85±0.1	0.85±0.1
6.8 nF	0.85±0.1	0.85±0.1	0.85±0.1	0.85±0.1	0.85±0.1	1.25±0.2	
10 nF	0.85±0.1	0.85±0.1	0.85±0.1	0.85±0.1	0.85±0.1	1.25±0.2	
15 nF	0.85±0.1	0.85±0.1	0.85±0.1	0.85±0.1	0.85±0.1	1.25±0.2	
22 nF	0.85±0.1	0.85±0.1	0.85±0.1	0.85±0.1	0.85±0.1	1.25±0.2	
33 nF	0.85±0.1	0.85±0.1	0.85±0.1	0.85±0.1	1.25±0.2		
47 nF	0.85±0.1	0.85±0.1	0.85±0.1	0.85±0.1	1.25±0.2		
68 nF	0.85±0.1	0.85±0.1	0.85±0.1	0.85±0.1 1.25±0.2	1.25±0.2		
100 nF	0.85±0.1	0.85±0.1	0.85±0.1	0.85±0.1 1.25±0.2	1.25±0.2		
150 nF	0.85±0.1	0.85±0.1	0.85±0.1	1.25±0.2			
220 nF	0.85±0.1	0.85±0.1	0.85±0.1	1.25±0.2			
330 nF	1.25±0.2	1.25±0.2	1.25±0.2	1.25±0.2			
470 nF	1.25±0.2	1.25±0.2	1.25±0.2	1.25±0.2			
680 nF	1.25±0.2	1.25±0.2	1.25±0.2	1.25±0.2			
1 μF	1.25±0.2	1.25±0.2	1.25±0.2	1.25±0.2			
2.2 μF	1.25±0.2	1.25±0.2	1.25±0.2				

NOTE

1. Values in shaded cells indicate thickness class in mm
2. Capacitance value of non E-6 series is on request

CAPACITANCE RANGE & THICKNESS FOR X7R

Table 9 Size 1206

CAP.	1206						
	6.3 V	10V	16V	25V	50 V	100 V	250 V
22 nF	0.85±0.1	0.85±0.1	0.85±0.1	0.85±0.1	0.85±0.1	0.85±0.1	1.25±0.2
33 nF	0.85±0.1	0.85±0.1	0.85±0.1	0.85±0.1	0.85±0.1	0.85±0.1	1.60±0.2
47 nF	0.85±0.1	0.85±0.1	0.85±0.1	0.85±0.1	0.85±0.1	0.85±0.1	1.60±0.2
68 nF	0.85±0.1	0.85±0.1	0.85±0.1	0.85±0.1	0.85±0.1	1.25±0.2	1.60±0.2
100 nF	0.85±0.1	0.85±0.1	0.85±0.1	0.85±0.1	0.85±0.1	1.25±0.2	1.60±0.2
150 nF	0.85±0.1	0.85±0.1	0.85±0.1	0.85±0.1	1.25±0.2	1.25±0.2	
220 nF	0.85±0.1	0.85±0.1	0.85±0.1	0.85±0.1	1.25±0.2	1.25±0.2	
330 nF	0.85±0.1	0.85±0.1	0.85±0.1	0.85±0.1	1.60±0.2	1.60±0.2	
470 nF	1.00±0.1	1.00±0.1	1.00±0.1	1.00±0.1	1.60±0.2	1.60±0.2	
680 nF	1.15±0.1	1.15±0.1	1.15±0.1	1.60±0.2	1.60±0.2	1.60±0.2	
1 μF	1.15±0.1	1.15±0.1	1.15±0.1	1.60±0.2	1.60±0.2	1.60±0.2	
2.2 μF	1.60±0.2	1.60±0.2	1.60±0.2	1.60±0.2	1.60±0.2	1.60±0.2	

NOTE

1. Values in shaded cells indicate thickness class in mm
2. Capacitance value of non E-6 series is on request

CAPACITANCE RANGE & THICKNESS FOR X7R

Table 10 Size 1210

CAP.	1210							1812	
	6.3V	10 V	16 V	25 V	50V	100 V	250 V	50V	100V
100 nF	0.85±0.1	0.85±0.1	0.85±0.1	0.85±0.1	0.85±0.1	0.85±0.1	1.25±0.2		
150 nF	0.85±0.1	0.85±0.1	0.85±0.1	0.85±0.1	1.25±0.2	1.25±0.2			
220 nF	0.85±0.1	0.85±0.1	0.85±0.1	0.85±0.1	1.25±0.2	1.25±0.2			
330 nF	0.85±0.1	0.85±0.1	0.85±0.1	0.85±0.1	1.25±0.2	2.0±0.2			
470 nF	1.25±0.2	1.25±0.2	1.25±0.2	1.25±0.2	1.25±0.2	2.0±0.2		1.60±0.2	1.60±0.2
680 nF	1.25±0.2	1.25±0.2	1.25±0.2	1.25±0.2	1.25±0.2	2.0±0.2		1.60±0.2	1.60±0.2
1 μF	1.25±0.2	1.25±0.2	1.25±0.2	1.25±0.2	1.25±0.2	2.0±0.2		1.60±0.2	1.60±0.2
2.2 μF					2.0±0.2	2.0±0.2			
4.7 μF					2.5±0.2				

NOTE

1. Values in shaded cells indicate thickness class in mm

CAPACITANCE RANGE & THICKNESS FOR 4C-ARRAY

Table 11 Temperature characteristic material from NP0

CAPACITANCE	0508 (4 x 0402)	0612 (4 x 0603)
	50 V	50 V
10 pF	0.6±0.1	0.8±0.1
15 pF	0.6±0.1	0.8±0.1
18 pF	0.6±0.1	0.8±0.1
22 pF	0.6±0.1	0.8±0.1
33 pF	0.6±0.1	0.8±0.1
39 pF	0.6±0.1	0.8±0.1
47 pF	0.6±0.1	0.8±0.1
56 pF	0.6±0.1	0.8±0.1
68 pF	0.6±0.1	0.8±0.1
82 pF	0.6±0.1	0.8±0.1
100 pF	0.6±0.1	0.8±0.1
120 pF		0.8±0.1
150 pF		0.8±0.1
180 pF		0.8±0.1
220 pF		0.8±0.1
270 pF		0.8±0.1
330 pF		0.8±0.1
390 pF		0.8±0.1
470 pF		0.8±0.1
560 pF		
680 pF		
820 pF		
1.0 nF		

NOTE

Values in shaded cells indicate thickness class in mm

CAPACITANCE RANGE & THICKNESS FOR 4C-ARRAY

Table 12 Temperature characteristic material from X7R

CAPACITANCE	0508 (4 x 0402)			0612 (4 x 0603)		
	16 V	25 V	50 V	16 V	25 V	50 V
220 pF				0.8±0.1	0.8±0.1	0.8±0.1
330 pF				0.8±0.1	0.8±0.1	0.8±0.1
470 pF				0.8±0.1	0.8±0.1	0.8±0.1
680 pF				0.8±0.1	0.8±0.1	0.8±0.1
1.0 nF	0.6±0.1	0.6±0.1	0.6±0.1	0.8±0.1	0.8±0.1	0.8±0.1
1.5 nF	0.6±0.1	0.6±0.1		0.8±0.1	0.8±0.1	0.8±0.1
2.2 nF	0.6±0.1	0.6±0.1		0.8±0.1	0.8±0.1	0.8±0.1
3.3 nF	0.6±0.1	0.6±0.1		0.8±0.1	0.8±0.1	0.8±0.1
4.7 nF	0.6±0.1	0.6±0.1		0.8±0.1	0.8±0.1	0.8±0.1
6.8 nF	0.6±0.1	0.6±0.1		0.8±0.1	0.8±0.1	0.8±0.1
10 nF	0.6±0.1	0.6±0.1		0.8±0.1	0.8±0.1	0.8±0.1
15 nF	0.6±0.1			0.8±0.1	0.8±0.1	
22 nF	0.6±0.1			0.8±0.1	0.8±0.1	
33 nF	0.6±0.1			0.8±0.1	0.8±0.1	
47 nF	0.6±0.1			0.8±0.1	0.8±0.1	
68 nF	0.6±0.1					
100 nF	0.6±0.1					

NOTE

Values in shaded cells indicate thickness class in mm

THICKNESS CLASSES AND PACKING QUANTITY

Table 13

SIZE CODE	THICKNESS CLASSIFICATION	TAPE WIDTH QUANTITY PER REEL	Ø180 MM / 7 INCH		Ø330 MM / 13 INCH	
			Paper	Blister	Paper	Blister
0201	0.3 ±0.03 mm	8 mm	15,000	---	50,000	---
0402	0.5 ±0.05 mm	8 mm	10,000	---	50,000	---
0603	0.8 ±0.1 mm	8 mm	4,000	---	15,000	---
0805/0508	0.6 ±0.1 mm	8 mm	4,000	---	20,000	---
	0.85 ±0.1 mm	8 mm	4,000	---	15,000	---
	1.25 ±0.2 mm	8 mm	---	3,000	---	10,000
1206/0612	0.6 ±0.1 mm	8 mm	4,000	---	20,000	---
	0.85 ±0.1 mm	8 mm	4,000	---	15,000	---
	1.0/1.15 ±0.1 mm	8 mm	---	3,000	---	10,000
	1.25 ±0.2 mm	8 mm	---	3,000	---	10,000
	1.6 ±0.2 mm	8 mm	---	2,000	---	10,000
1210	0.85 ±0.1 mm	8 mm	---	4,000	---	10,000
	1.15 ±0.1 mm	8 mm	---	3,000	---	10,000
	1.25 ±0.2 mm	8 mm	---	3,000	---	10,000
1812	0.6 / 0.85±0.1 mm	12 mm	---	2,000	---	---
	1.15±0.1 mm	12 mm	---	1,000	---	---
	1.25±0.2 mm	12 mm	---	1,000	---	---

ELECTRICAL CHARACTERISTICS

NP0/X7R DIELECTRIC CAPACITORS; NI/SIN TERMINATIONS

Unless otherwise specified, all test and measurements shall be made under standard atmospheric conditions for testing as given in 5.3 of IEC 60068-1:

- Temperature: 15 °C to 35 °C
- Relative humidity: 25% to 75%
- Air pressure: 86 kPa to 106 kPa

Before the measurements are made, the capacitor shall be stored at the measuring temperature for a time sufficient to allow the entire capacitor to reach this temperature.

The period as prescribed for recovery at the end of a test is normally sufficient for this purpose.

Table 14

DESCRIPTION		VALUE
Capacitance range		0.2 pF to 2.2 μF
Capacitance tolerance		
NP0	C < 10 pF	±0.1 pF, ±0.25 pF, ±0.5 pF
	C ≥ 10 pF	±1%, ±2%, ±5%
X7R		±5% [1], ±10%, ±20%
Dissipation factor (D.F.)		
NP0	C < 30 pF	≤ 1 / (400 + 20C)
	C ≥ 30 pF	≤ 0.1 %

X7R	0201	0402	0603	0805	1206	1210	1812	0508 (Array)	0612 (Array)	
≤10V		220pF to 100nF	1nF to 1uF	1nF to 2.2uF	22nF to 2.2uF	100nF to 1uF				≤ 5%
										≤ 10%
16V		220pF to 22nF	1nF to 220nF	1nF to 470nF	22nF to 1uF	100nF to 1uF		1nF to 10nF	220pF to 47	≤ 3.5%
		27nF to 100nF	470nF to 1uF	680nF to 2.2uF	2.2 uF			15nF to 100nF		≤ 5%
25V	100pF to 470pF	220pF to 10nF	1nF to 39nF	1nF to 180nF	22nF to 680nF	100nF to 1uF		1nF to 10nF	220pF to 47	≤ 2.5%
		12nF to 27nF	47nF to 220nF	220nF to 470nF	1uF					≤ 3.5%
	560pF to 10nF	47nF to 100nF	1uF	680nF to 1uF	2.2 uF					≤ 5%
50V	100pF to 470pF	220pF to 10nF	1nF to 39nF	1nF to 180nF	22nF to 470nF	100nF to 1uF	470nF to 1uF	1nF	220pF to 10	≤ 2.5%
			47nF to 100nF	220nF to 470nF						≤ 3.5%
				680nF to 1uF	680nF to 2.2uF	2.2uF				≤ 5%
	560pF to 1nF					4.7uF				≤ 10%
100V		220pF to 1.5nF	1nF to 10nF	1nF to 100nF	22nF to 470nF	100nF to 220nF	470nF to 1uF			≤ 2.5%
			12nF to 47nF		680nF to 2.2uF	330nF to 2.2uF				≤ 5%
250V				1nF to 22nF	22nF to 100nF	100nF				≤ 2.5%
500V				1nF to 4.7nF						≤ 2.5%

Insulation resistance after 1 minute at U_r (DC)	IR ≥ 10 GΩ or I.R × C ≥ 500 seconds whichever is less
Maximum capacitance change as a function of temperature (temperature characteristic/coefficient):	
NP0	±30 ppm/°C
X7R	±15%
Operating temperature range:	
NP0/X7R	–55 °C to +125 °C

NOTE

1. Capacitance tolerance ±5% doesn't available for X7R full product range, please contact local sales force before order

SOLDERING RECOMMENDATION

Table 15

SOLDERING METHOD	SIZE 0402	0603	0805	1206	≥ 1210
Reflow	≥ 0.1 μF	≥ 1.0 μF	≥ 2.2 μF	≥ 4.7 μF	Reflow only
Reflow/Wave	< 0.1 μF	< 1.0 μF	< 2.2 μF	< 4.7 μF	---

SOLDERING CONDITIONS

The lead free MLCCs are able to stand the reflow soldering conditions as below:

- Temperature: above 220 °C
- Endurance: 95 to 120 seconds
- Cycles: 3 times

The test of "soldering heat resistance" is carried out in accordance with the schedule of "MIL-STD-202F-method 210F", "The robust construction of chip capacitors allows them to be completely immersed in a solder bath of 270 °C for 10 seconds". Therefore, it is possible to mount MLCCs on one side of a PCB and other discrete components on the reverse (mixed PCBs). Surface Mount Capacitors are tested for solderability at 245 °C during 2 seconds. The test condition for no leaching is 260°C for 30 seconds.

TESTS AND REQUIREMENTS

Table 16 Test procedures and requirements

TEST	TEST METHOD		PROCEDURE	REQUIREMENTS
Mounting	IEC 60384-21/22	4.3	The capacitors may be mounted on printed-circuit boards or ceramic substrates	No visible damage
Capacitance	IEC 60384-21/22	4.5.1	Class 1: At 20 °C, 24 hours after annealing f = 1 MHz for C ≤ 1nF, measuring at voltage 1 V_{rms} at 20 °C f = 1 KHz for C > 1nF, measuring at voltage 1 V_{rms} at 20 °C Class 2: At 20 °C, 24 hours after annealing f = 1 KHz, measuring at voltage 1 V_{rms} at 20 °C	Within specified tolerance
Dissipation Factor (D.F.)	IEC 60384-21/22	4.5.2	Class 1: At 20 °C, 24 hours after annealing f = 1 MHz for C ≤ 1nF, measuring at voltage 1 V_{rms} at 20 °C f = 1 KHz for C > 1nF, measuring at voltage 1 V_{rms} at 20 °C Class 2: At 20 °C, 24 hours after annealing f = 1 KHz, measuring at voltage 1 V_{rms} at 20 °C	In accordance with specification
Insulation Resistance	IEC 60384-21/22	4.5.3	At U_r (DC) for 1 minute	In accordance with specification

TEST	TEST METHOD	PROCEDURE	REQUIREMENTS
Temperature coefficient	4.6	Capacitance shall be measured by the steps shown in the following table. The capacitance change should be measured after 5 min at each specified temperature stage. Step: Temperature(℃) a: 25±2 b: Lower temperature±3℃ c: 25±2 d: Upper Temperature±2℃ e: 25±2 (1) Class I Temperature Coefficient shall be calculated from the formula as below $\text{Temp, Coefficient} = \frac{C2 - C1}{C1 \times \Delta T} \times 10^6$ [ppm/℃] C1: Capacitance at step c C2: Capacitance at 125℃ ΔT: 100℃(=125℃-25℃) (2) Class II Capacitance Change shall be calculated from the formula as below $\Delta C = \frac{C2 - C1}{C1} \times 100\%$ C1: Capacitance at step c C2: Capacitance at step b or d	<General purpose series> Class1: Δ C/C: ±30ppm Class2: X7R: Δ C/C: ±15% <High Capacitance series> Class2: X7R/X5R: Δ C/C: ±15%
High Temperature Exposure	AEC-Q200 3	Unpowered ; 1000hours @ T=150℃ Measurement at 24±2 hours after test conclusion.	No visual damage Δ C/C : Class1: NP0: within ±0.5% or 0.5 pF whichever is greater Class2: X7R: ±10% D.F.: within initial specified value IR: within initial specified value

TEST	TEST METHOD		PROCEDURE	REQUIREMENTS
Temperature Cycling	AEC-Q200	4	Preconditioning; 150 +0/–10 °C for 1 hour, then keep for 24 ±1 hours at room temperature 1000 cycles with following detail: 30 minutes at lower category temperature 30 minutes at upper category temperature Recovery time 24 ±2 hours	No visual damage ΔC/C Class1: NP0: Within ±1% or 0.5pF, whichever is greater. Class2: X7R: ±10% D.F. meet initial specified value IR meet initial specified value
Destructive Physical Analysis	AEC-Q200	5	10ea X 3 lots. Note: Only applies to SMD ceramics. Electrical test not required.	
Moisture Resistance	AEC-Q200	6	T=24 hrs/per cycle; 10 continuous cycles unpowered. Measurement at 24 ±2 hours after test condition.	No visual damage ΔC/C NP0: Within ±3% or 3 pF, whichever is greater X7R: ±15% D.F. Within initial specified value IR NP0: ≥ 10,000 MΩ X7R: Meet initial specified value

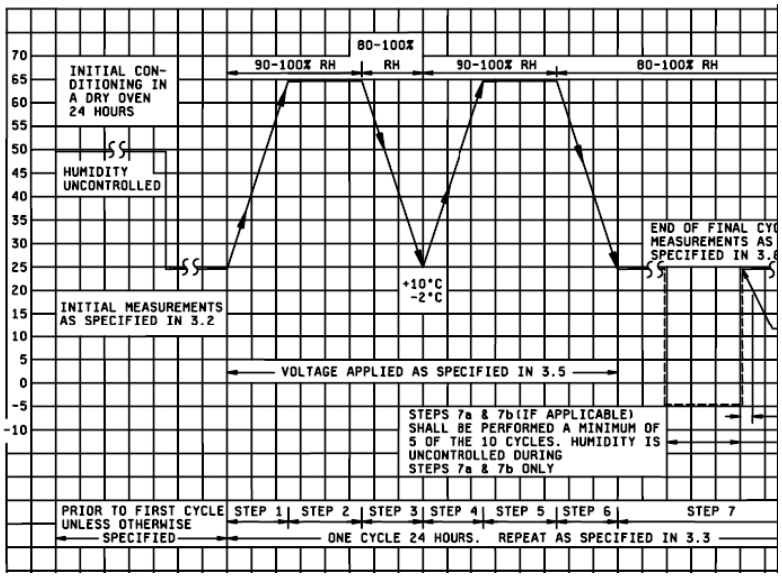

Fig. 4 Moisture resistant

TEST	TEST METHOD	PROCEDURE	REQUIREMENTS
Biased Humidity	AEC-Q200 7	1. Preconditioning, class 2 only: 150 +0/-10 °C /1 hour, then keep for 24 ±1 hour at room temp 2. Initial measure: Parameter: IR Measuring voltage: 1.5V ± 0.1 VDC Note: Series with 100 KΩ & 6.8 KΩ 3. Test condition: 85 °C, 85% R.H. connected with 100 KΩ resistor, applied 1.5V/U_r for 1,000 hours. 4. Recovery: Class1: 6 to 24 hours Class2: 24 ±2 hours 5. Final measure: IR	No visual damage after recovery Initial requirement: Class1: - Connected to 100 KΩ: C ≤ 10 nF: I.R ≥ 10,000 MΩ or C > 10 nF: (I.R-100 KΩ) x C ≥ 100s. - Connected to 6.8 KΩ: C ≤ 10 nF: I.R ≥ 10,000 MΩ or C > 10 nF: (I.R-6.8 KΩ) x C ≥ 100s. Class2: - Connected to 100 KΩ: C ≤ 25 nF: I.R ≥ 4,000 MΩ or C > 25 nF: (I.R-100 KΩ) x C ≥ 100s. - Connected to 6.8 KΩ: C ≤ 25 nF: I.R ≥ 10,000 MΩ or C > 25 nF: (I.R-6.8 KΩ) x C ≥ 100s. Final measurement: The insulation resistance shall be greater than 0.1 time initial value.

TEST	TEST METHOD		PROCEDURE	REQUIREMENTS
Operational Life	AEC-Q200	8	1. Preconditioning, class 2 only: 150 +0/-10 °C /1 hour, then keep for 24 ±1 hour at room temp 2. Initial measure: Spec: refer to initial spec C, D, IR 3. Endurance test: Temperature: X7R: 125 °C Specified stress voltage applied for 1,000 hours: Applied 2.0 x U_r for general products Applied 1.5 x U_r for high cap. Products High voltage series follows with below stress condition: Applied 1.5 x Ur for 200V, 250V series Applied 1.3 x Ur for 500V, 630V series Applied 1.2 x Ur for 1KV, 2KV, 3KV series 4. Recovery time: 24 ±2 hours 5. Final measure: C, D, IR Note: If the capacitance value is less than the minimum value permitted, then after the other measurements have been made the capacitor shall be preconditioned according to *"IEC 60384 4.1"* and then the requirement shall be met.	No visual damage ΔC/C NP0: Within ±2% or 1 pF, whichever is greater X7R: ±15% D.F. NP0: ≤ 2 x specified value. X7R: ≤ 16V: ≤ 7% or specified value whichever is greater ≥ 25V: ≤ 5% or specified value whichever is greater IR NP0: ≥ 4,000 MΩ or IR x C_r ≥ 40s whichever is less X7R: ≥ 1,000 MΩ or IRx C_r ≥ 50s whichever is less
External Visual	AEC-Q200	9	Any applicable method using × 10 magnification	In accordance with specification
Physical Dimension	AEC-Q200	10	Verify physical dimensions to the applicable device specification.	In accordance with specification
Mechanical Shock	AEC-Q200	13	Three shocks in each direction shall be applied along the three mutually perpendicular axes of the test specimen (18 shocks) Peak value: 1,500 g's Duration: 0.5 ms Velocity change: 15.4 ft/s Waveform: Half-sin	ΔC/C NP0: Within ±0.5% or 0.5 pF, whichever is greater X7R: ±10% D.F. Within initial specified value IR Within initial specified value
Vibration	AEC-Q200	14	5 g's for 20 minutes, 12 cycles each of 3 orientations. Note: Use 8" x 5" PCB. 0.31" thick 7 secure points on one long side and 2 secure points at corners of opposite sides. Parts mounted within 2" from any secure point. Test from 10-2000 Hz.	ΔC/C NP0: Within ±0.5% or 0.5 pF, whichever is greater X7R: ±10% D.F: meet initial specified value IR meet initial specified value

TEST	TEST METHOD		PROCEDURE	REQUIREMENTS
Resistance to Soldering Heat	AEC-Q200	15	Precondition: 150 +0/–10 °C for 1 hour, then keep for 24 ±1 hours at room temperature Preheating: for size ≤ 1206: 120 °C to 150 °C for 1 minute Preheating: for size >1206: 100 °C to 120 °C for 1 minute and 170 °C to 200 °C for 1 minute Solder bath temperature: 260 ±5 °C Dipping time: 10 ±0.5 seconds Recovery time: 24 ±2 hours	Dissolution of the end face plating shall not exceed 25% of the length of the edge concerned ΔC/C Class1: NP0: Within ±1% or 0.5 pF, whichever is greater. Class2: X7R: ±10% D.F. within initial specified value IR within initial specified value
Thermal Shock	AEC-Q200	16	1. Preconditioning, class 2 only: 150 +0/-10 °C /1 hour, then keep for 24 ±1 hour at room temp 2. Initial measure: Spec: refer to initial spec C, D, IR 3. Rapid change of temperature test: NP0/X7R: -55 °C to +125 °C; 300 cycles 15 minutes at lower category temperature; 15 minutes at upper category temperature. 4. Recovery time: Class1: 6 to 24 hours Class2: 24 ±2 hours 5. Final measure: C, D, IR	No visual damage ΔC/C NP0: Within ±1% or 1 pF, whichever is greater X7R: ±15% D.F: meet initial specified value IR meet initial specified value
ESD	AEC-Q200	17	Per AEC-Q200-002	A component passes a voltage level if all components stressed at that voltage level pass.
Solderability	AEC-Q200	18	Preheated to a temperature of 80 °C to 140 °C and maintained for 30 seconds to 60 seconds. Test conditions for lead containing solder alloy Temperature: 235 ±5 °C Dipping time: 2 ±0.2 seconds Depth of immersion: 10 mm Alloy Composition: 60/40 Sn/Pb Number of immersions: 1 Test conditions for lead-free containing solder alloy Temperature: 245 ±5 °C Dipping time: 3 ±0.3 seconds Depth of immersion: 10 mm Alloy Composition: SAC305 Number of immersions: 1	The solder should cover over 95% of the critical area of each termination.

TEST	TEST METHOD		PROCEDURE	REQUIREMENTS
Electrical Characterization	AEC-Q200	19	Parametrically test per lot and sample size requirements, summary to show Min, Max, Mean and Standard deviation at room as well as Min and Max operating temperatures. Class 1: NP0: -55 °C to +125 °C Normal temperature: 20 °C Class 2: X7R: -55 °C to +125 °C Normal temperature: 20 °C	ΔC/C Class 1: NP0: ±30 ppm/°C Class2: X7R: ±15%
Board Flex	AEC-Q200	21	Part mounted on a 100 mm X 40 mm FR4 PCB board, which is 1.6 ±0.2 mm thick and has a layer-thickness 35 μm ± 10 μm. Part should be mounted using the following soldering reflow profile. Conditions: Class1: Bending 3 mm at a rate of 1 mm/s, radius jig 340 mm Class2: Bending 2 mm at a rate of 1 mm/s, radius jig 340 mm Test Substrate:	No visible damage ΔC/C Class1: NP0: Within ±1% or 0.5 pF, whichever is greater Class2: X7R: ±10%
Terminal Strength	AEC-Q200	22	With the component mounted on a PCB obtained with the device to be tested, apply a 17.7N (1.8Kg) force to the side of a device being tested. This force shall be applied for 60+1 seconds. Also the force shall be applied gradually as not to apply a shock to the component being tested. * Apply 2N force for 0402 size.	Magnification of 20X or greater may be employed for inspection of the mechanical integrity of the device body, terminals and body/terminal junction. Before, during and after the test, the device shall comply with all electrical requirements stated in this specification.

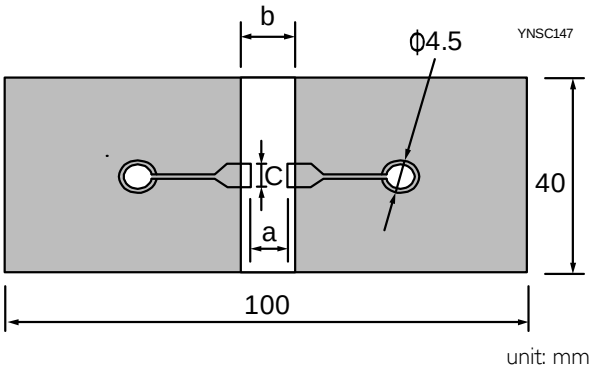

	Dimension(mm)		
Type	a	b	c
0201	0.3	0.9	0.3
0402	0.4	1.5	0.5
0603	1.0	3.0	1.2
0805	1.2	4.0	1.65
1206	2.2	5.0	1.65
1210	2.2	5.0	2.0
1808	3.5	7.0	3.7

TEST	TEST METHOD	PROCEDURE	REQUIREMENTS
Beam Load Test	AEC-Q200 23	Place the part in the beam load fixture. Apply a force until the part breaks or the minimum acceptable force level required in the user specification(s) is attained.	≤ 0805 Thickness > 0.5mm: 20N Thickness ≤ 0.5mm: 8N ≥ 1206 Thickness ≥1.25 mm: 54N Thickness < 1.25 mm: 15N
Voltage Proof		1. Specified stress voltage applied for 1~5 seconds 2. Ur ≤ 100 V: series applied 2.5 Ur 3. 100 V < Ur ≤ 200 V series applied (1.5 Ur + 100) 4. 200 V < Ur ≤ 500 V series applied (1.3 Ur + 100) 5. Ur > 500 V: 1.3 Ur 6. Ur ≥ 1000 V: 1.2 Ur Charge/Discharge current is less than 50 mA	No breakdown or flashover

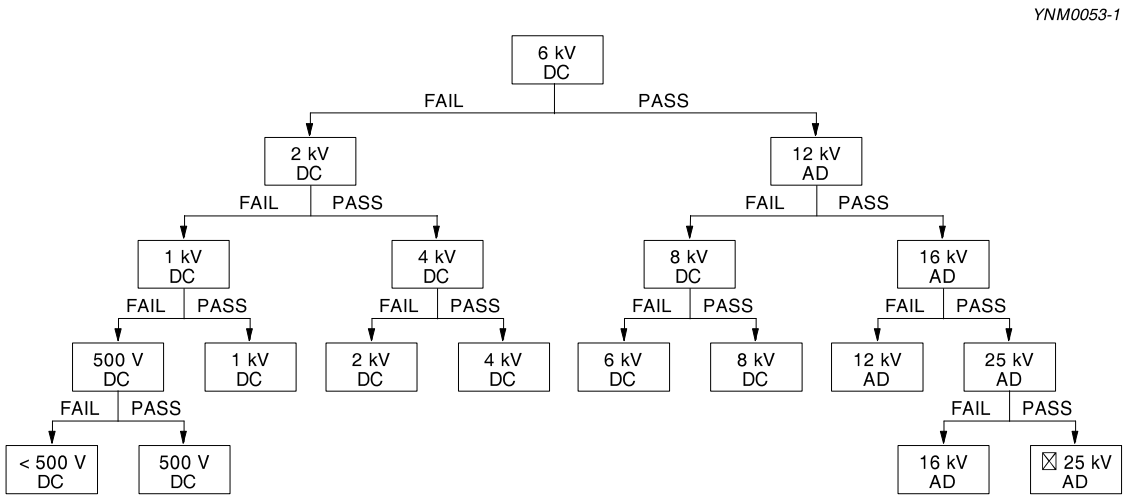

Note: Classify the components according to the highest ESD voltage level survived during ESD testing.

Fig. 5 Passive component HBM ESD test flow diagram (DC = Direct Contact Discharge, AD = Air Discharge)

REVISION HISTORY

REVISION	DATE	CHANGE NOTIFICATION	DESCRIPTION
Version 11	Jun. 29, 2018	-	- Add 0201 NPO 25V/ 50V, 0.2pF to 33pF, Add 0402 NPO 50V 270pF to 1nF, Add 0805 X7R 25V 2.2uF
Version 10	May. 2, 2018	-	- Add 0603 NPO 100V 820pF to 1nF, - Add 0805 NPO 50V to 100V, 1.2nF to 10nF, - Add 0805 X7R 16V 2.2uF, 50V 680nF to 1uF, - Add 1206 X7R 100V 330nF to 2.2uF, 250V 33nF to 100nF
Version 9	Mar. 22, 2018	-	- Add 0402 X7R 100nF 25~50V
Version 8	Nov. 22, 2017	-	- Add X7R/0201/25V/100pF~10nF
Version 7	Jul. 7, 2017	-	- Add X7R/0805/330nF to 470nF/50V, X7R/1206/10uF/6.3V
Version 6	Mar. 31, 2017	-	- Add NPO/0603/1nF/50V, X7R/0603/1uF/10V, X7R/0603/470nF/16V, X7R/0603/220nF/25V
Version 5	Nov. 15, 2016	-	- Add Soldering Condition
Version 4	Jun. 14, 2016	-	- Add X7R/0805/2.2uF/10V and NPO/1206/1.2nF to 1.5nF/250V
Version 3	Jul. 21, 2015	-	- Tests and Requirements update
Version 2	Jul. 17, 2014	-	- Tests and Requirements update
Version 1	Apr. 19, 2013	-	- Capacitance range update
Version 0	Dec. 25, 2012	-	- New

LEGAL DISCLAIMER

Yageo, its distributors and agents (collectively, "Yageo"), hereby disclaims any and all liabilities for any errors, inaccuracies or incompleteness contained in any product related information, including but not limited to product specifications, datasheets, pictures and/or graphics. Yageo may make changes, modifications and/or improvements to product related information at any time and without notice.

Yageo makes no representation, warranty, and/or guarantee about the fitness of its products for any particular purpose or the continuing production of any of its products. To the maximum extent permitted by law, Yageo disclaims (i) any and all liability arising out of the application or use of any Yageo product, (ii) any and all liability, including without limitation special, consequential or incidental damages, and (iii) any and all implied warranties, including warranties of fitness for a particular purpose, non-infringement and merchantability.

Yageo statements regarding the suitability of products for certain types of applications are based on Yageo's knowledge of typical operating conditions for such types of applications in a generic nature. Such statements are neither binding statements of Yageo nor intended to constitute any warranty concerning the suitability for a specific customer application or use. They are intended for use only by customers with requisite knowledge and experience for determining whether Yageo products are the correct products for their application or use. In addition, unpredicatable and isolated cases of product failure may still occur, therefore, customer application or use of Yageo products which requires higher degree of reliability or safety, shall employ additional protective safeguard measures to ensure that product failure would not result in personal injury or property damage.

Yageo products are not designed for application or use in medical, life-saving, or life-sustaining devices or for any other application or use in which the failure of Yageo products could result in personal injury or death. Customers using or selling Yageo products not expressly indicated for above-mentioned purposes shall do so at their own risk and agree to fully indemnify Yageo and hold Yageo harmless.

Information provided here is intended to indicate product specifications only. Yageo reserves all the rights for revising this content without further notification, as long as products are unchanged. Any product change will be announced by PCN.