XC6219B Series

300mA Higt PSRR LDO Regulator

www.sot23.com.tw

General Description

XC6219B is a high performance, 300mA LDO regulator, offering extremely high PSRR and ultra-low dropout. Ideal for portable RF and wireless applications with demanding performance and space requirements.

XC6219 is available in 5pin SOT23-5 Package .the output standards of 1.2V 1.5V 1.8V 2.5V 2.8V 3.0V 3.3V

Features

- Quiescent Current: 70uA
- PSRR:70dB@1KHz
- < 1uA current at shutdown mode
- Output current:300mA(Typ.)
- SOT23-5 package

Applications

- CDM/GSM mobile phone
- PDAs /MP3
- Audio/Video equipment

Ordering Information

XC6219B 332MR

Output voltage: 12=1.2V
15=1.5V
18=1.8V
30=3.0V
33=3.3V
XX=X.XV

BLOCK DIAGRAM

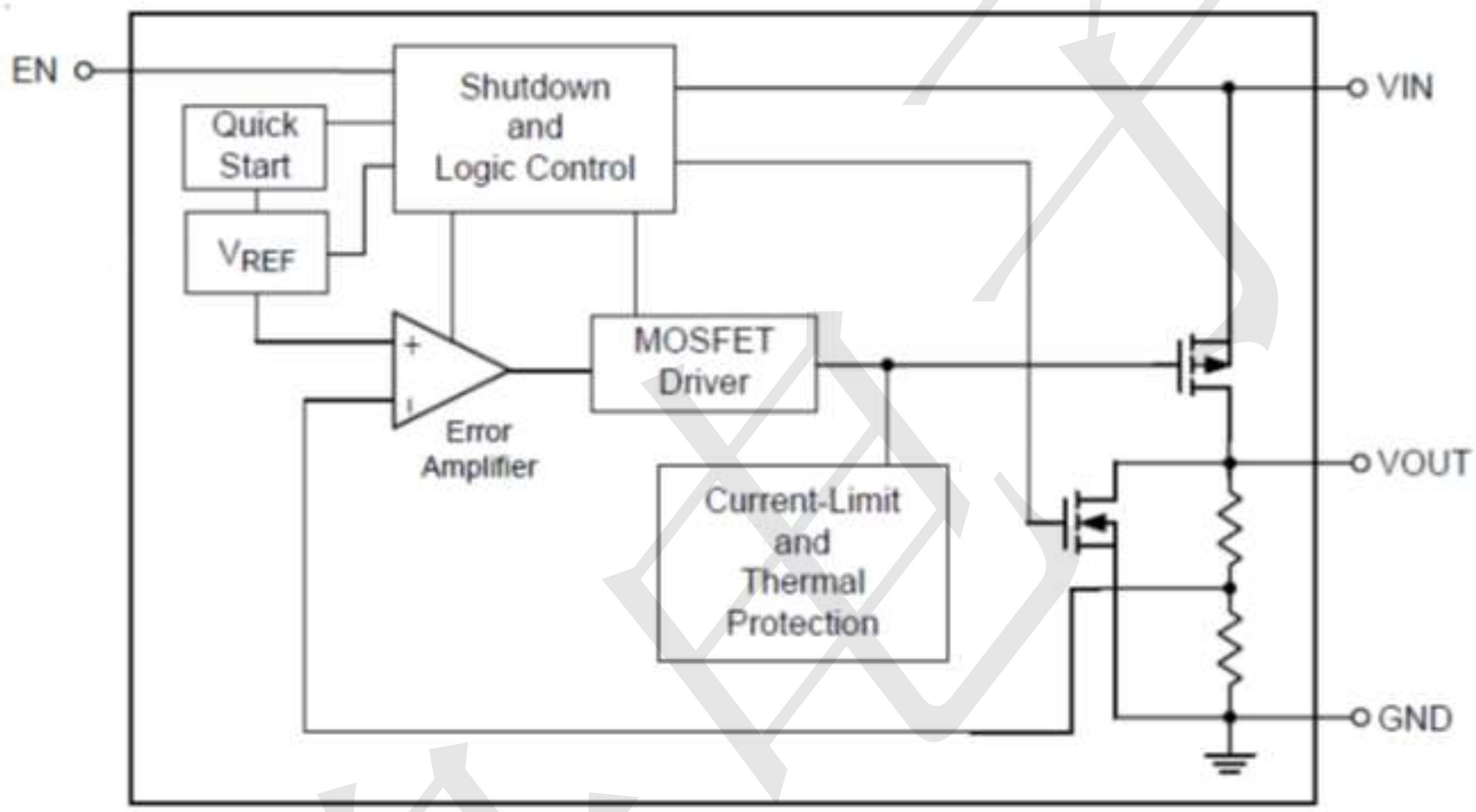

PIN CONFIGURATION

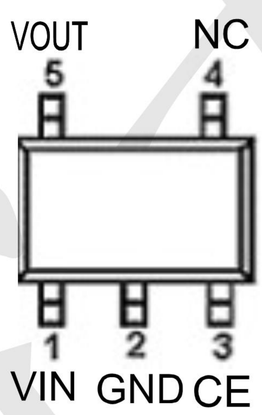

SOT23-5

Pin Name	Function
VIN	Supply power
GND	Ground
CE	Enable pin
NC	NC
VOUT	Voltage output

台舟电子版权所有

Absolute Maximum Rating (T_A=25°C unless otherwise noted)

Parameter	Symbol	Maximum Rating		Unit
Input Voltage	V_{IN}	6		V
Output Voltage	V_{OUT}	V_{SS}-0.3～V_{IN}+0.3		
Output Current	I_{out}	450		mA
Power Dissipation	P_D	SOT-23-5	250	mW
Operating Ambient Temperature	Topr	-40～+85		°C
Storage Temperature	Tstg	-40～+125		

Electrical Characteristics (T =25°C unless otherwise noted)

(Vin=Vout+1V,Cin=Cout=1uF,Ta=25^{0}C)

PARAMETER	SYMBOL	CONDITIONS	MIN	TYP	MAX	UNITS
Output Voltage	V_{OUT}(E) (Note 2)	I_{OUT}=40mA, V_{IN}=Vout+1V	X 0.98	V_{OUT} (T) (Note 1)	X 1.02	V
Input Voltage	V_{IN}				6	V
Max. Output Current	I_{OUT}max	V_{IN}=Vout+1V		300		mA
Load Regulation	ΔV_{OUT}	V_{IN}=Vout+1V, 1mA≤I_{OUT}≤100mA		50		mV
Dropout Voltage (Note 3)	V_{dif1}	I_{OUT} =100mA		90		mV
	V_{dif2}	I_{OUT} =200mA		230		mV
Supply Current	I_{SS}	V_{IN}=Vout+1V		70		μA
Standby Current	I_{CEL}	Vce＝0V		1		μA
Line Regulation	$\frac{\Delta V_{OUT}}{\Delta V_{IN} \cdot V_{OUT}}$	I_{OUT} =40mA Vout+1V ≤V_{IN}≤8V		0.05		%/V
Output Noise	en	I_{OUT} =40mA, 300Hz~50kHz		50		uVrms
Ripple Rejection Rate	PSRR	Vin= [Vout+1]V +1Vp-pAC I_{OUT} =40mA,f=1kHz		70		dB

TYPICAL APPLICATION

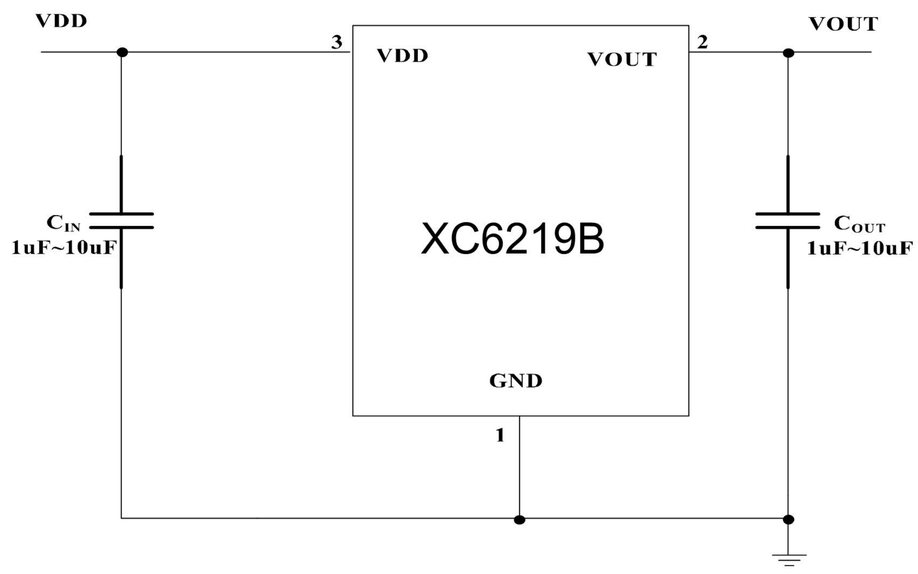

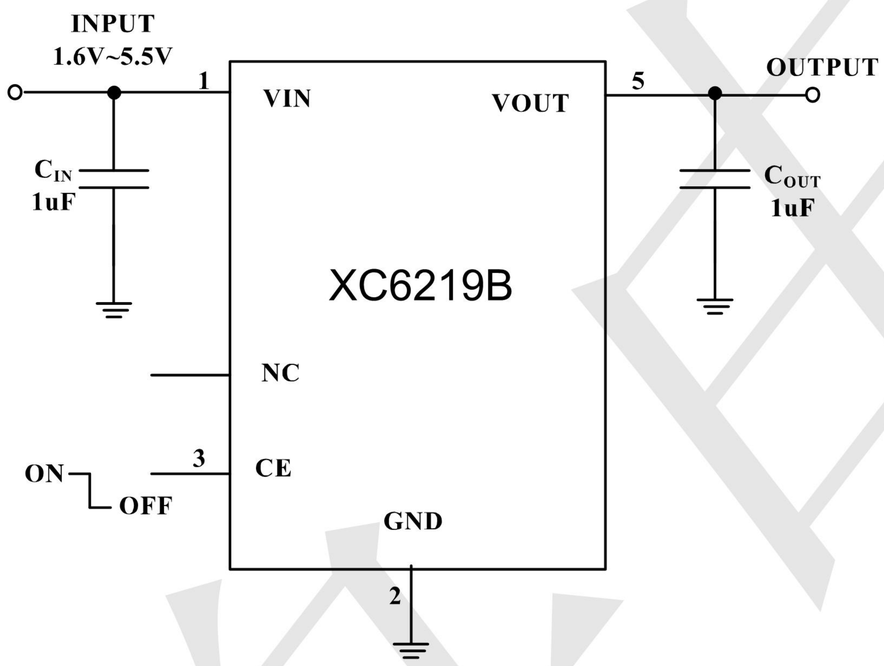

台舟电子版权所有

Package informantion

SOT23-5

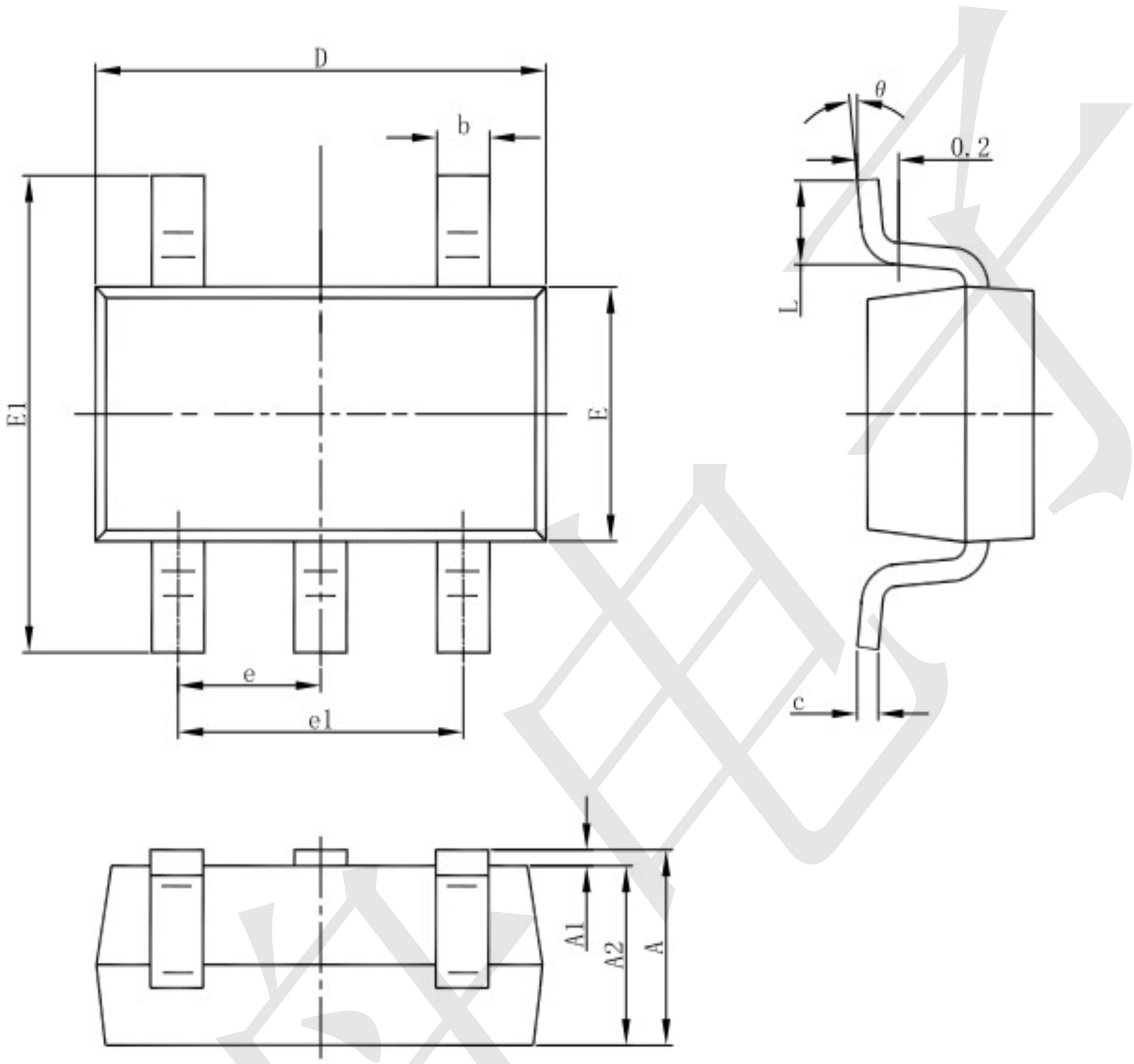

Symbol	Dimensions In Millimeters		Dimensions In Inches	
	Min	Max	Min	Max
A	1.050	1.250	0.041	0.049
A1	0.000	0.100	0.000	0.004
A2	1.050	1.150	0.041	0.045
b	0.300	0.500	0.012	0.020
c	0.100	0.200	0.004	0.008
D	2.820	3.020	0.111	0.119
E	1.500	1.700	0.059	0.067
E1	2.650	2.950	0.104	0.116
e	0.950(BSC)		0.037(BSC)	
e1	1.800	2.000	0.071	0.079
L	0.300	0.600	0.012	0.024
θ	0°	8°	0°	8°

台舟电子版权所有