U6773V

Low-Power Off-line Primary Side Regulation Controller

GENERAL DESCRIPTION

The U6773V is a high performance AC/DC power supply controller for battery charger and adapter applications. The device uses Pulse Frequency Modulation (PFM) method to build discontinuous conduction mode (DCM) flyback power supplies. The U6773V provides accurate constant voltage, constant current (CV/CC) regulation without requiring an opto-coupler and the secondary control circuitry. It also eliminates the need of loop compensation circuitry while maintaining good stability.

The U6773Vcan achieve excellent regulation and high average efficiency, yet meets no-load consumption less than 30***mW***. It can also achieve excellent dynamic performance while maintaining 30***mW*** standby power with U6773V.

The U6773V has a built-in fixed cable voltage drop compensation function. The magnitude of the cable compensation voltage is set as 3% of the rated output voltage. It also has an adjustable built-in line compensation function to achieve tight CC.

FEATURES

- Primary Side Control for Tight Constant Current and Constant Voltage
- 30***mW*** No-load Input Power
- Excellent Dynamic Performance with U6773V
- Mosfet Driving
- Proprietary Adjustable Line Compensation for CC Variation
- Constant and Built-in 3% and No Cable Voltage Drop Compensation
- Enhanced Audio Noise Suppression
- Open Circuit Protection
- Over Voltage Protection
- Short Circuit Protection
- SOP7 package

APPLICATIONS

- Adapters/Chargers for Cell/cordless Phones, PDAs, MP3 and Other Portable Devices
- LED Driver
- Standby and Auxiliary Power Supplies

APPLICATION CIRCUIT

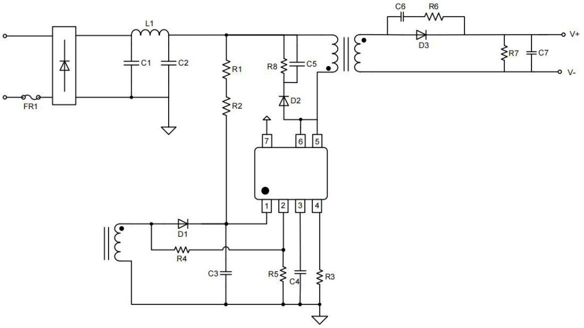
C6
R6
L1
V+
D3
C1
C2
R1
R8
C5
R7
C7
V-
FR1
R2
D2
7
6
5
1
2
3
4
D1
R4
C3
R5
C4
R3

Figure 1. Schematic diagram

PIN ASSIGNMENT & MARKING INFORMATION

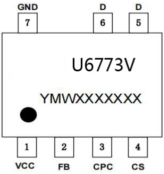
GND
D
D
7
6
5
U6773V
YMWXXXXXXX
1
2
3
4
VCC
FB
CPC
CS

Figure 2. Pin Configuration of U6773V(Top View)

PIN	SILKSCREEN	INSTRUCTION
Left Figure	U6773V	Chip model
	Y	Year
	M	month
	W	week
	XXXXXX	Production Code

PIN DESCRIPTION

Pin name	Pin number	Function description
VCC	1	This pin receives rectified voltage from the auxiliary winding of the transformer
FB	2	The voltage feedback from auxiliary winding
CPC	3	This pin connects a capacitor to GND for output cable compensation
CS	4	Current sense for primary side of transformer
D	5,6	This pin is connected with an internal power MOSFET's drain
GND	7	This pin is the signal reference ground

BLOCK DIAGRAM

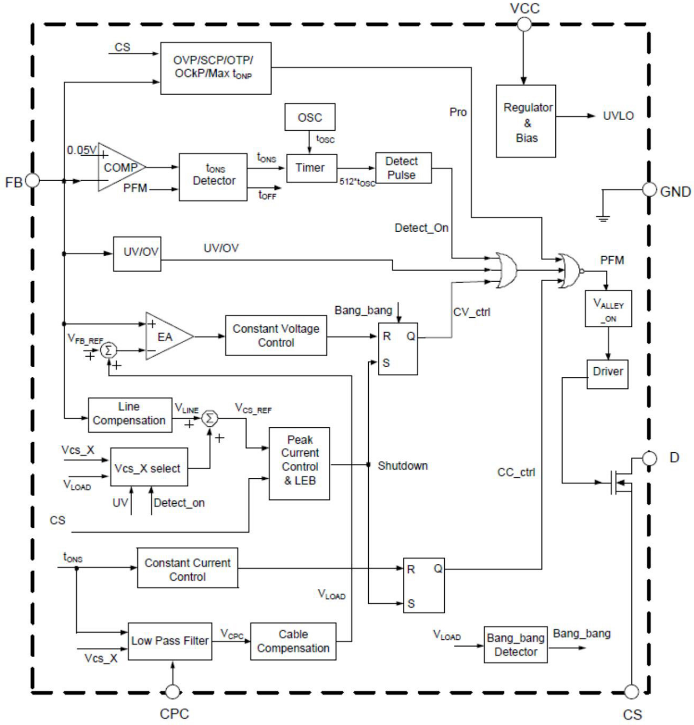
VCC
CS
OVP/SCP/OTP/
OCkP/Max t_{ONP}
Regulator
&
Bias
UVLO
Pro
OSC
t_{OSC}
0.05V
COMP
PFM
t_{ONS}
Detector
t_{ONS}
t_{OFF}
Timer
512*t_{OSC}
Detect
Pulse
FB
GND
Detect_On
UV/OV
UV/OV
PFM
Bang_bang
CV_ctrl
V_{ALLEY}
_ON
EA
Constant Voltage
Control
R
Q
S
V_{FB_REF}
Σ
Driver
Line
Compensation
V_{LINE}
Σ
V_{CS_REF}
Vcs_X
Vcs_X select
V_{LOAD}
UV
Detect_on
Peak
Current
Control
& LEB
Shutdown
CC_ctrl
D
CS
t_{ONS}
Constant Current
Control
R
Q
S
V_{LOAD}
Low Pass Filter
V_{CPC}
Cable
Compensation
Vcs_X
V_{LOAD}
Bang_bang
Detector
Bang_bang
CPC
CS

Figure 3. Functional Block Diagram of U6773V

ABSOLUTE MAXIMUM RATINGS

Symbol	Parameter	Value	Unit
BVDSS	Drain Voltage	650	V
VCC	Supply Voltage	-0.3~30	V
CS, CPC to GND		-0.3~7	V
VFB	FB Input Voltage	-0.3~8	V
TJ	Operating Junction Temperature	-40~150	℃
TSTG	Storage Temperature	-65~150	℃
TLEAD	Lead Temperature (Soldering, 10sec)	260	℃
—	ESD (Machine Model)	200	V
—	ESD (Human Body Model)	2000	V
θJA	Thermal Resistance (Junction to Ambient)	40	ºC/W

Note1: Stresses greater than those listed under “Absolute Maximum Ratings” may cause permanent damage to the device. These are stress ratings only, and functional operation of the device at these or any other conditions beyond those indicated under “Recommended Operating Conditions” is not implied. Exposure to “Absolute Maximum Ratings” for extended periods may affect device reliability.

ELECTRICAL CHARACTERISTICS

(T_A = 25 °C, if not otherwise noted)

Symbol	Parameter	Test Condition	Min	Typ	Max	Unit
UVLO SECTION						
V_{TH} (ST)	Startup Threshold		13	15.5	18	V
V_{OPR}(MIN)	Minimal Operating Voltage		5.5	6.5	7.5	V
STANDBY CURRENT SECTION						
IST	Startup Current	VCC=VTH (ST)-1V, Before startup	0	0.2	0.6	uA
ICC(OPR)	Operating Current	Static current	300	400	500	uA
CURRENT SENSE SECTION						
V_{CS}	Current Sense Threshold Voltage at Heavy Load (CV Mode) and CC Mode		480	510	540	mV
t_{LEB}	Leading Edge Blanking		300	475	800	nS
FEEDBACK INPUT SECTION						
I_{FB}	FB Input Leakage Current	V_{FB}=4V	2	3	4	uA
V_{FB}	Feedback Threshold		3.94	4	4.06	V
LINE COMPENSATION SECTION						
gm	Line Compensation Transconductance		1.1	1.5	1.9	uS
CABLE COMPENSATION SECTION						
ΔVFB _CABLE /VFB %	Cable Compensation Voltage		-	3	-	%
PROTECTION SECTION						
$V_{CC(OVP)}$	Over Voltage Protection		25	27.5	30	V
$V_{FB(OVP)}$	Over Voltage Protection		5.5	6.5	7.5	V
$V_{FB(SCP)}$	Short Circuit Protection		1.0	1.2	1.4	V
POWER MOSFET SECTION						
BV_{DSS}	Drain-Source Breakdown Voltage		650	-	-	V
$R_{DS(ON)}$	On State Resistor		-	2.6	-	Ω

Typical Performance Characteristics

I_{CC}(OPR) vs. V_{CC}

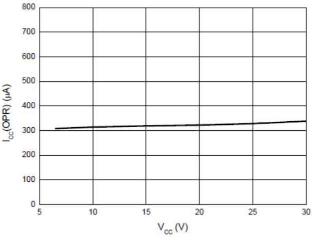

I_{FB} vs. V_{CC}

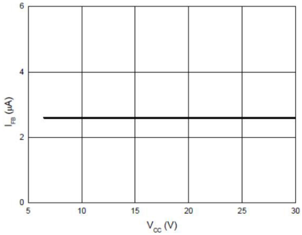

V_{GATE} vs. V_{CC}

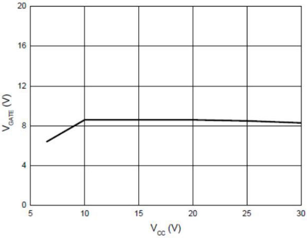

t_{ONP}(MAX) vs. V_{CC}

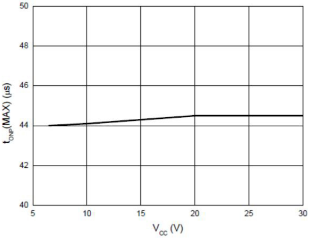

Typical Performance Characteristics (Continued)

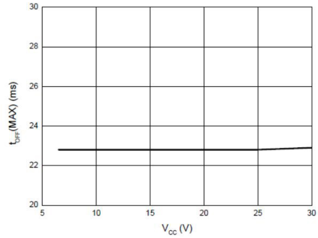
t_{OFF}(MAX) vs. V_{CC}

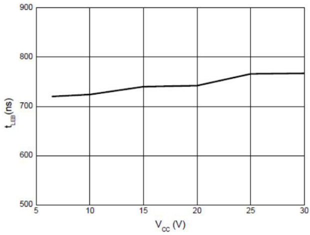
t_{LEB} vs. V_{CC}

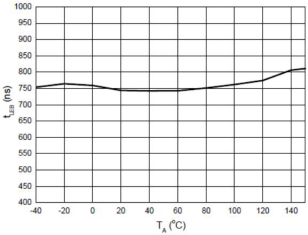
t_{LEB} vs. T_A

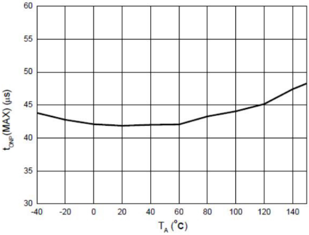
t_{ONP}(MAX) vs. T_A

V_{TH}(ST) vs. T_A

V_{OPR}(MIN) vs. T_A

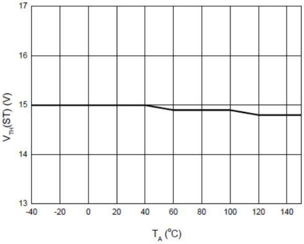

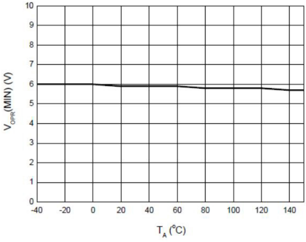

Typical Performance Characteristics (Continued)

I_{CC}(OPR) vs. T_A

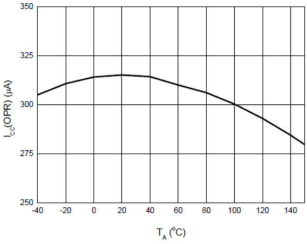

I_{ST} vs. T_A

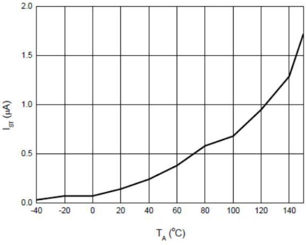

t_{OFF}(MAX) vs. T_A

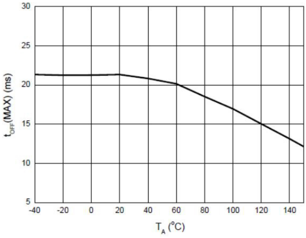

V_{GATE} vs. T_A

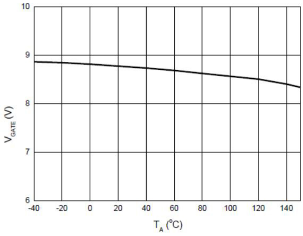

$R_{DS(ON)}$ vs. T_A

V_{FB} vs. T_A

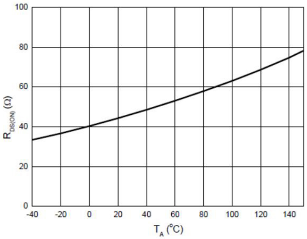

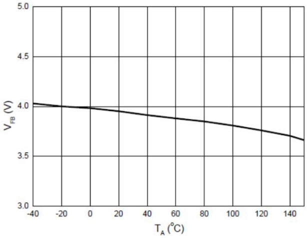

PACKAGE INFORMATION

SOP7

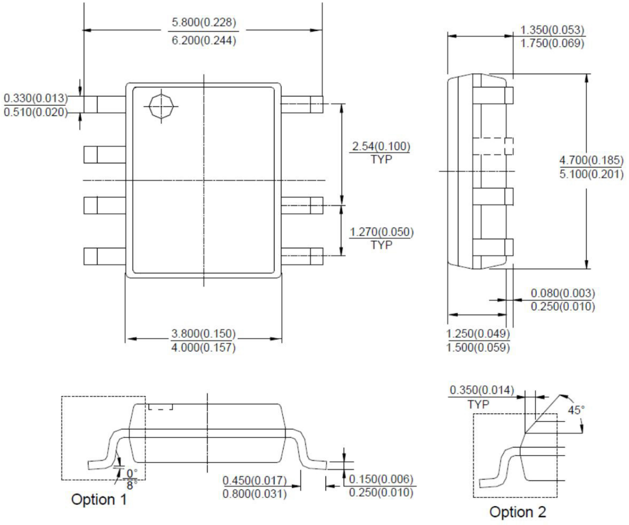
5.800(0.228)
6.200(0.244)
0.330(0.013)
0.510(0.020)
2.54(0.100)
TYP
1.270(0.050)
TYP
3.800(0.150)
4.000(0.157)
1.350(0.053)
1.750(0.069)
4.700(0.185)
5.100(0.201)
0.080(0.003)
0.250(0.010)
1.250(0.049)
1.500(0.059)
0°
8°
Option 1
0.450(0.017)
0.800(0.031)
0.150(0.006)
0.250(0.010)
0.350(0.014)
TYP
45°
Option 2

Note: Eject hole, oriented hole and mold mark is optional.