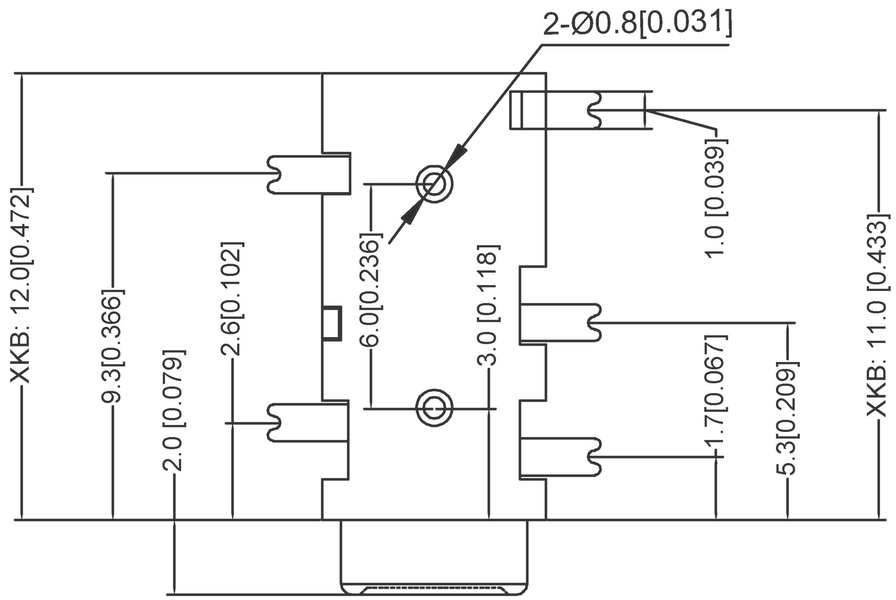

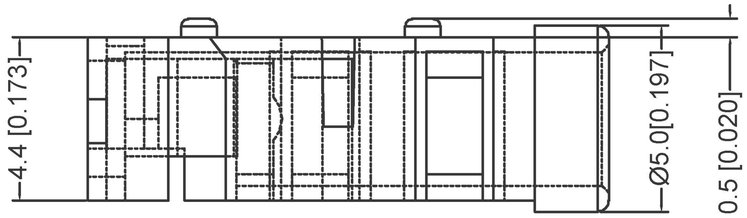

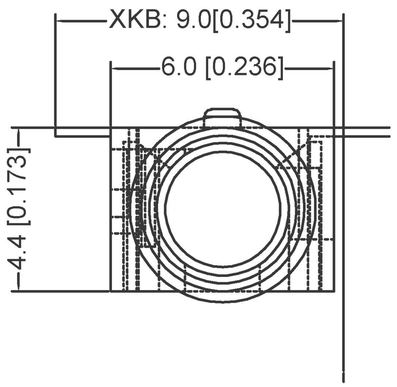

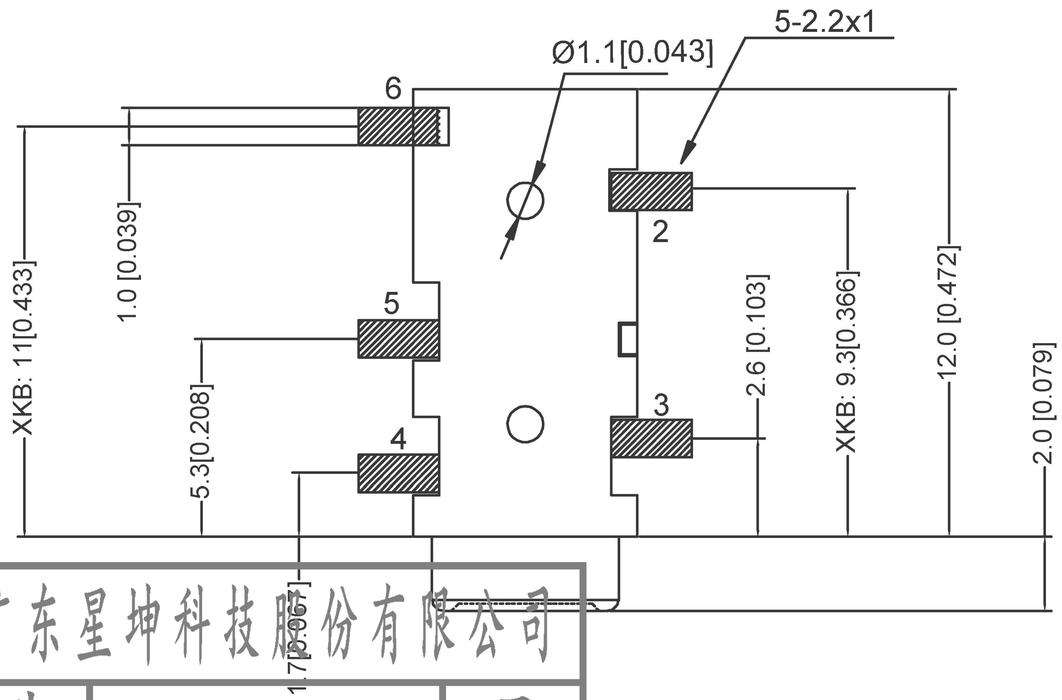

PJ-327ST-SMT	PJ-327ST-SMT-1	PJ-327ST-SMT-2	PJ-327ST-SMT-3	PJ-327ST-SMT-4
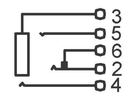	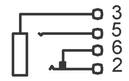	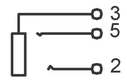	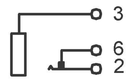	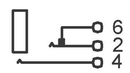

	MATERIAL	PLATING
terminal 2	Phosphor Bronze	Gold
terminal 3	Phosphor Bronze	Gold
terminal 4	Phosphor Bronze	Gold
terminal 5	Phosphor Bronze	Gold
terminal 6	Phosphor Bronze	Gold
plastic	High Temp. Thermoplastic	

广东星坤科技股份有限公司

生效		日期
ΔX		
ΔX		
ΔX		

文件工程章

MARK	DESCRIPTION	DATE	REVISED	APPROVED

REVISIONS

ANGLAR	±5°
X.X	±0.2mm
X.XX	±0.1mm
X.XXX	±0.05mm

UNSPECIFIED TOLERANCES

DSND		DATE		SCALE: N/A
DWN		DATE		VIEW:
CHKD		DATE		UNIT: mm/in
APPD		DATE		SIZE: A4

XKB INDUSTRIAL PRECISION CO. LIMITED

MODEL TYPE: 3.5 PHONE JACK

PART NO.:

DWG NO.: PJ-327ST-SMT

WEIGHT	SHEET	REVISION