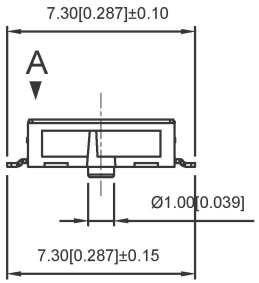

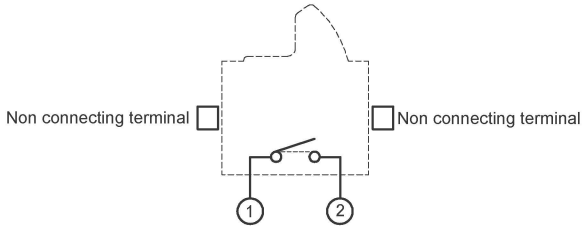

Circuit diagram: normally open (N.O.)

1 circuit 1 contact

Terminal arrangement (viewed from direction a)

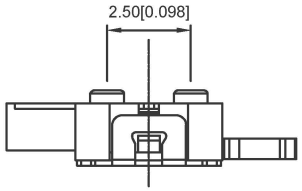

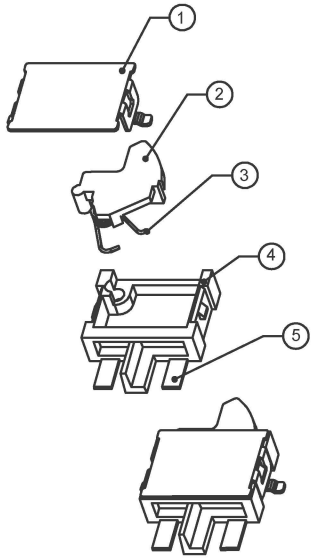

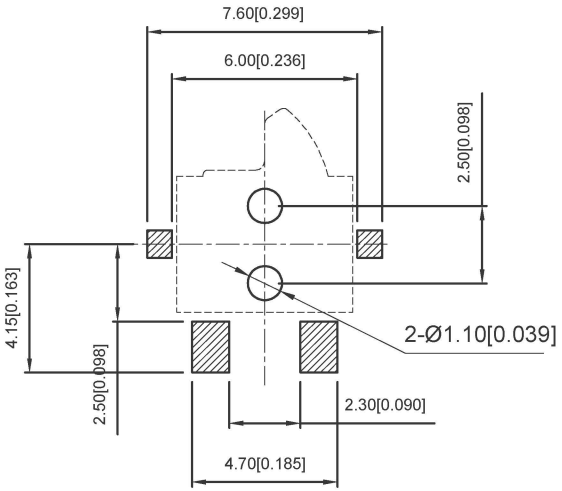

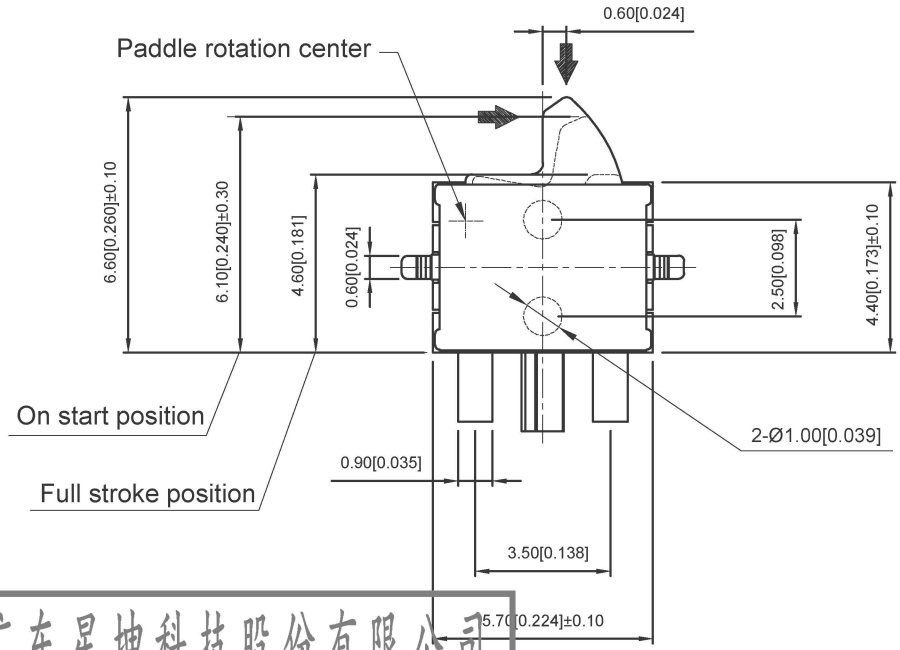

ITEM	PAPT NAMF	QTY	Material	
5	Welding leg	1	Bass	
4	Pedestal	1	LCP	grey
3	Spring	1	Phosphor copper	
2	Button	1	LCP	grey
1	lid	1	SUS	

广东星坤科技股份有限公司
生效日期
文件工程章

MARK	DESCRIPTION	DATE	REVISED	APPROVED

REVISIONS

www.xk-dg.cn www.helloxkb.com www.helloxkb.cn

units:	mm	
tolerance:		
X.X	±0.2mm	
X.XX	±0.1mm	
X.XXX	±0.05mm	

UNSPECIFIED TOLERANCES

DSND		DATE		SCALE: N/A
DWN		DATE		VIEW:
CHKD		DATE		UNIT: mm/in
APPD		DATE		SIZE: A4

XKB INDUSTRIAL PRECISION CO.,LIMITED

MODEL TYPE: TACT SWITCH

PART NO.:

DWG NO.: TM-1617SB

WEIGHT	SHEET	REVISION
1.0g	1/1	A0