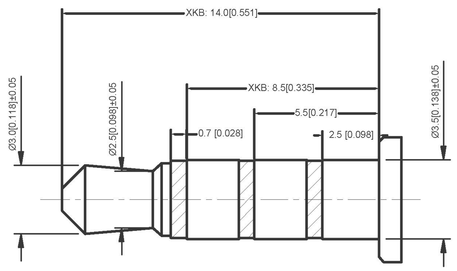

(Ø3.5mm 4 POLE PLUG DETAIL DRAWING)

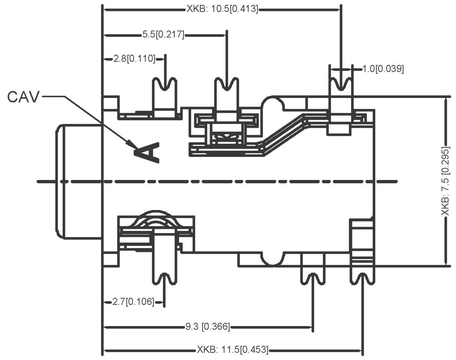

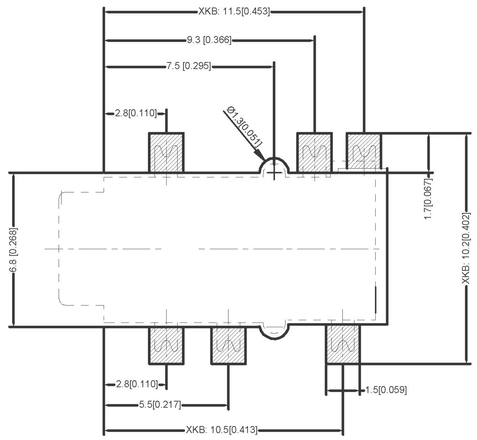

PCB LAYOUT TOP VIEW

TOLERANCES:±0.05

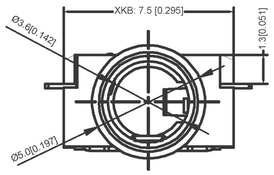

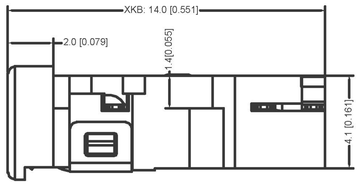

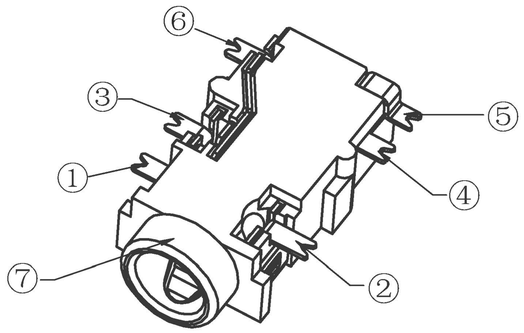

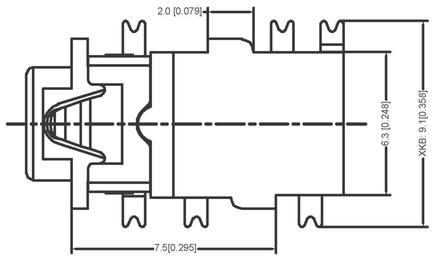

NO	PART NAME	QTY	MATERIAL(THICK)	PLATING(COLOR)
⑦	HOUSING	1	HIGH TEMP.THERMOPLASTIC	Black
⑥	TERMINAL 6#	1	COPPER ALLOY t=0.20	Au-Plated
⑤	TERMINAL 5#	1	COPPER ALLOY t=0.20	Au-Plated
④	TERMINAL 4#	1	COPPER ALLOY t=0.20	Au-Plated
③	TERMINAL 3#	1	COPPER ALLOY t=0.20	Au-Plated
②	TERMINAL 2#	1	COPPER ALLOY t=0.20	Au-Plated
①	TERMINAL 1#	1	COPPER ALLOY t=0.20	Au-Plated

广东星坤科技股份有限公司
生 日
数 期
文 件 工 程 章

MARK	DESCRIPTION	DATE	REVISED	APPROVED
ΔX				
ΔX				
ΔX				

REVISIONS

UNSPECIFIED TOLERANCES	
ANGLAR	±5°
X.X	±0.2mm
X.XX	±0.1mm
X.XXX	±0.05mm

www.xk-dg.cn www.helloxkb.com www.helloxkb.cn

DSND		DATE		SCALE: N/A
DWN		DATE		VIEW:
CHKD		DATE		UNIT: mm/in
APPD		DATE		SIZE: A4

XKB INDUSTRIAL PRECISION CO.,LIMITED

MODEL TYPE: 3.5 PHONE JACK

PART NO.:

DWG NO.: PJ-342D

WEIGHT	SHEET	REVISION
1.0g	1/1	A0