SPECIFICATIONS:
1.ELECRICALCHARACTERISTICS1-1RATING:DC24V6A
1-2.CONTACT RESISTANCE:30m2MAX.(INITIAL)
1-3DIELECTRIC WITHSTANDING VOLTAGE:500V AC FOR ONE MINUTE
1-4.INSULATION RESISTANCE:100M2 MIN. MEASURED BY 50OV DC
2.MECHANICAL CHARACTERISTICS:
2-1.Plug it into the mother socket 3 times INSERTION FORCE:03~3.0 KGF
2-2. Plug it into the mother socket 5000 times INSERTION FORCE:0.3~3.0 KGF
3.SALT FOG: 24 Hours
4.FOR REFLOW SOLDERING LEAD-FREE PROCESS.
5.*REPRESENT CRITICAL DIMENSIONS.

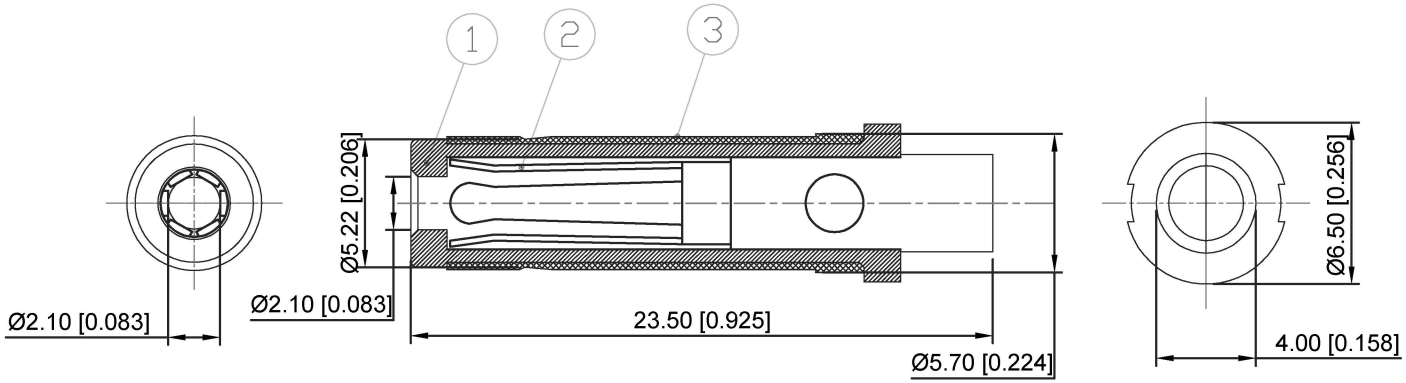

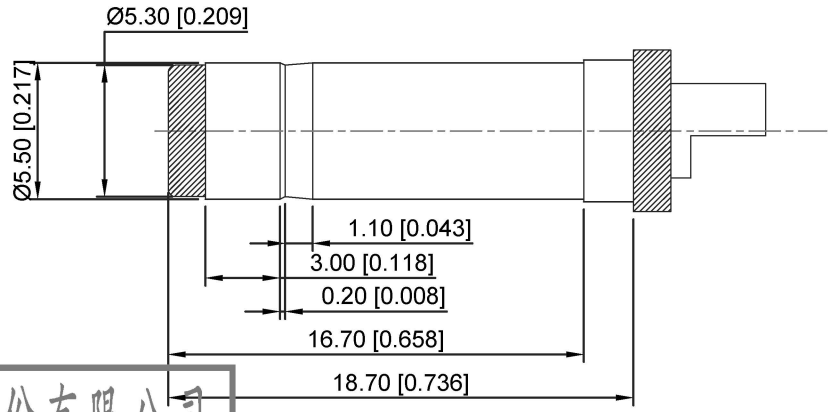

	MATERIAL	PLATING
TERMINAL 1	Phosphor bronze	NI
Fork hook tube	H65	NI
plastic	PBT	Black

广东星坤科技股份有限公司

生效		日期
ΔX		
ΔX		
MARK	DESCRIPTION	DATE	REVISED	APPROVED

文件工程章

REVISIONS

www.xk-ig.cn www.helloxkb.com www.helloxkb.cn

ANGLAR	±5°
L≤4	±0.2
4<L≤16	±0.3
16<L≤63	±0.4
L>63	±0.5

UNSPECIFIED TOLERANCES

DSND		DATE		SCALE: N/A
DWN		DATE		VIEW:
CHKD		DATE		UNIT: mm/in
APPD		DATE		SIZE: A4

XKB INDUSTRIAL PRECISION CO.,LIMITED

MODEL TYPE: DC PIUG

PART NO.: DT-2355521

DWG NO.:

WEIGHT	SHEET	REVISION
1.0g	1/1	A0