XKB

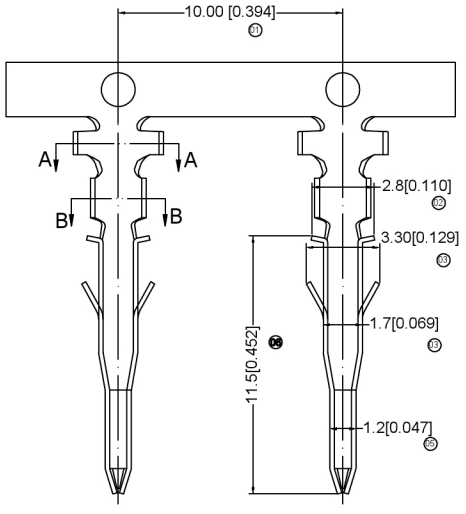

SECTION A-A
SCALE 1:1

SECTION B-B
SCALE 1:1

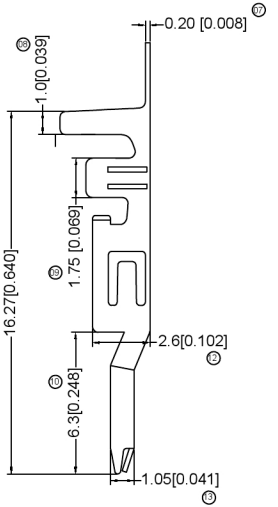

Specifications:
规格： XKB
Voltage rating:600V AC/DC
额定电压：600V AC/DC
Current rating:9A AC/DC
额定电流：9A AC/DC
Withstanding voltage:1500V AC/minute
耐受电压：1500V AC/分钟
Temperature range:-25℃-+85℃
温度范围：-25℃-+85℃
Insulation resistance:≥1000MΩ
绝缘电阻：≥1000MΩ
Contact resistance:≤10mΩ
接触电阻：≤10mΩ
After environmental testing:≤20mΩ
环境测试后：≤20兆欧

X9357 W R X-2*XX X-XX XX XX
01 02 03 04 05 06 07

X9357TM-X SNX-X
01 02 03 04 05 06 07

1 Series No.
2 Category:T-Terminal
3 Appearance type:M-Male Terminal
4 Material: B-Brass;P-Phosphor Bronze
5 Plating Style: SN-Bright Tin Plating
6 Plating Method:
Blank-Stamping before Plating
7 Mold N0/MARK&Special NO

X9357TM-PSN	Phosphor Bronze	AWG#18-22	3.00mm(Max)	Stamping Before Plating:30u" Ni;/0u"Sn	X9357HF
X9357TM-BSN	Brass				
PART NO	Material	Wire Range	Insulation O.D	Finish	Suitable XKB

广东星坤科技股份有限公司
生效日期
文件工程章

MARK	DESCRIPTION	DATE	REVISED	APPROVED

REVISIONS
www.hellxxkb.com

XKB

XKB	ANGLAR	±5°
	L≤4	±0.2
	4<L≤16	±0.3
	16<L≤63	±0.4
	L>63	±0.5
	UNSPECIFIED TOLERANCES	

DSND		DATE		SCALE: N/A	MODEL TYPE: X9357TM-BSN-H
DWN		DATE		VIEW:	PART NO.: 2.40mm Crimp Style Connectors
CHKD		DATE		UNIT: mm/in	DWG NO.:
APPD		DATE		SIZE: A4	

XKB INDUSTRIAL PRECISION CO.,LIMITED

WEIGHT	SHEET	REVISION
1.0g	1/1	A0