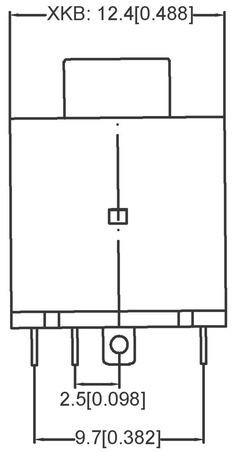

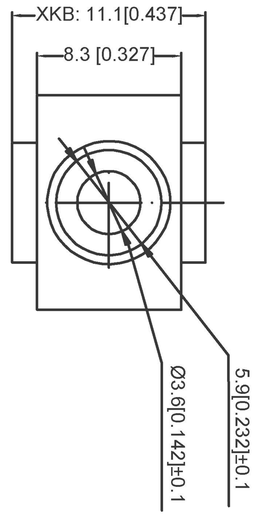

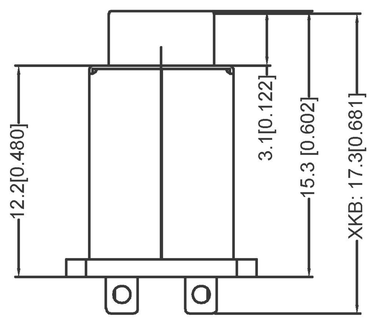

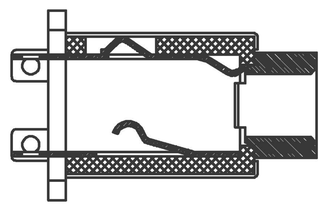

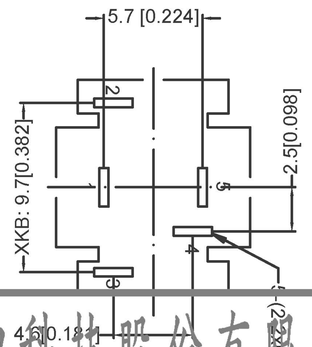

Temperature :	-20~70 C
温度：	-20~70 C
Rated Load:	DC 30V 0.3A
额定负载:	DC 30V 0.3A
Contact Resistance :	<0.03
接触电阻 :	<0.03
Insulation Resistance:	>100M
绝缘电阻:	>100M
Withstand Voltage :	AC500V(50Hz)/min
耐受电压 ：	AC500V(50Hz)/分钟
Actuating Force :	2.2~35N
驱动力：	2.2~35N
Life :	3000N
寿命:	3000N

PIN	PJ-378-X	
Schematic	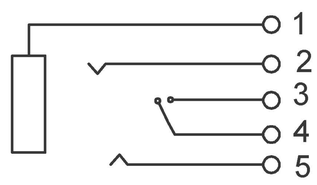	G:Green R:Red

	MATERIAL	PLATING
termina 1	Phosphor Bronze	ag
termina 2	Phosphor Bronze	ag
termina 3	Phosphor Bronze	ag
termina 4	Phosphor Bronze	ag
terminal 5	Phosphor Bronze	ag
copper bush	Brass	tin
base	PBT	
cover	PA66	
Shell	SUS	
Plastic	PA66	

广东星坤科技股份有限公司
生效日期
文件工程章

MARK	DESCRIPTION	DATE	REVISED	APPROVED
Δx				
Δx				

REVISIONS

UNSPECIFIED TOLERANCES	
ANGLAR	±5°
L≤4	±0.2
4<L≤16	±0.3
16<L≤63	±0.4
L>63	±0.5

DSND		DATE		SCALE: N/A	MODEL TYPE: 3.5 PHONE JACK
DWN		DATE		VIEW:	PART NO.:
CHKD		DATE		UNIT: mm/in	DWG NO.: PJ-378-X
APPD		DATE		SIZE: A4	

XKB INDUSTRIAL PRECISION CO.,LIMITED

WEIGHT	SHEET	REVISION
1.0g	1/1	A0

www.xk-dg.cn www.helloxkb.com www.helloxkb.cn