RoHS

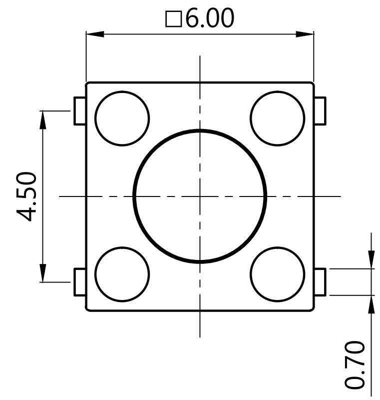

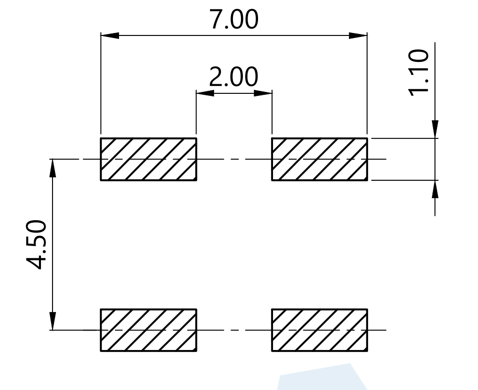

PCB Layout(Pattern side)

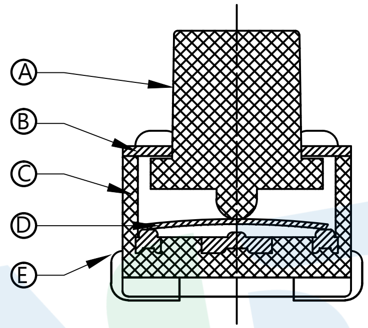

SHRAPNEL	
CODE	MATERIAL/QTY
D1	C5210/1PCS
D2	SUS/1PCS

OPERATING FORCE	
CODE	VIGOR
B1	120±30gf
B2	180±30gf
B3	250±30gf

TOTAL HEIGHT

CODE	H	ø	CODE	H	ø
A1	4.3	3.5	A14	11	3.0
A2	4.5	3.5	A145	11.5	3.0
A3	5.0	3.5	A15	12	3.0
A4	5.5	3.5	A155	12.5	3.0
A5	6.0	3.5	A16	13	3.0
A6	6.5	3.3	A165	13.5	3.0
A7	7.0	3.3	A17	14	3.0
A8	7.5	3.3	A18	15	3.0
A9	8.0	3.3	A19	16	3.0
A10	8.5	3.3	A20	17	3.0
A11	9.0	3.1	A21	18	2.9
A12	9.5	3.1	A22	19	2.9
A13	10	3.1	A23	20	2.9
A135	10.5	3.0	A24	21	2.9

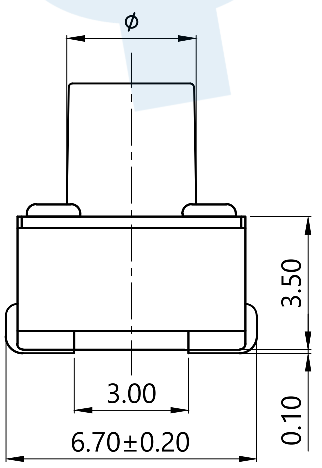

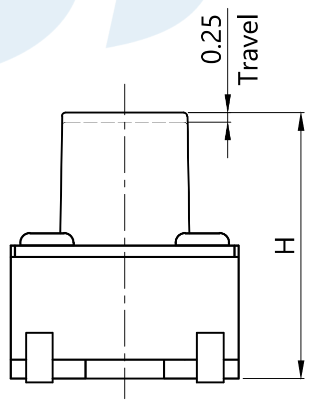

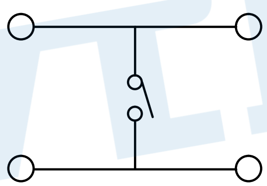

Circuit Diagram

NO.	Name	Number	Qty	Materil	Remarkd
E	Terminal		4	Brass	Silvering
D	Reed		1	SUS	Silver covered
C	Base		1	PPA	Black
B	Cover		1	Brass	Nickel Plating
A	Keystoke		1	PPA	Black

YUANDI® Yuandi Electronics Co,Ltd

angle	±2°	design		date		name	TACT SWITCHS
10~30	±0.30	Review		date			
5~10	±0.20	Approved		date		model	TS-1036U-A□B□-D□
~ 5	±0.10	Drawing number:					
Tolerance not specified		Proportion	1:1	unit	mm	gape number	A4

modify | Review | Approved